MISSION RUBBER

CIVILS

INDUSTRIAL

PLUMBING

TECHNICAL BROCHURE

www.missionrubber.co.uk »

MISSION
PRODUCT-FINDER

CONTENTS

COMPANY 03

About Mission Rubber 03
Our Commitment 04

UNIQUE SELLING POINTS

TOX®-Technology 05
Advanced Bolting System 06
"Lock in Place" Rubber Profile 07

MATERIAL SPECIFICATIONS

Stainless Steels 08
Caoutchouc Elastomers 09

STANDARDS & APPROVALS

Quality Management System, CE-Marking 11
Construction Products Regulation 12
Flexible Coupling Standards 12

CIVILS 13

COUPLINGS & ADAPTORS

Multi-Flexible-Coupling GENIUS 14
Coupling Canada Plus, Type 2B MSC for all pipe materials 16
Large Coupling MLC 18
Rubber Bush MBC 21
Wide Coupling MXL 22
Easy-Rep MER 26
Adaptor Coupling MAC 28
Drain Coupling MDC

JOINTS & RINGS

Roll-Ring MRR 34

SEALS FOR CONCRETE

Concrete Seal MKG 36
Clay to Concrete Seal BKL 38

LATERAL CONNECTIONS

Sewer Saddle TWISTEE® 40
Sewer Saddle TWISTEE® 42
Sewer Saddle T-FLEX 44
Lateral Connector LTC 46
Adaptor MPVCA 47
Lateral Connector M40 64
Lateral Connector M140 66

NON-RETURN & FLAP VALVES

Commercial Non Return Valve 54
Domestic Non Return Valve 55
Pipe Mounted Flap Valve 56
Wall Mounted Flap Valve 57
Eco Valves 58

ACCESSORIES

End Cap MEC 52
Clamp Bands 59
Lubricant 60

INDUSTRIAL 62

COUPLINGS

FKM Chemical Coupling 64
Chemical Coupling Transfer 66
No Hub Coupling 68
Coupling Canada Plus, Type 2B MSC 70
Adaptor Coupling MAC 72
Drain Coupling MDC 74
OEM Projects 76

PLUMBING 78

INTERNAL CONNECTIONS

Internal Drain Connector MRS New! 80
Drain Connector MAS New! 82
Push-in Adapter MPA 84
Single Pipe Connector SPC 86
Multi Pipe Connector MPC 88

EXTERNAL CONNECTIONS

Adaptor Coupling MAC 90
Drain Coupling MDC 92
Coupling Canada Plus, Type 2B MSC 94
Multi-Flexible-Coupling GENIUS 96

PLUMBING CONNECTIONS

Flexible Tee MPT 98
Flexible Elbow MPE 100
End Cap MEC 102
Rainwater Adaptor 104
Waste Adaptor 104
Lubricant 105

PIPE TABLE 106

Pipe Outside diameter Civils 106
Pipe Outside diameter Plumbing 107

ABOUT MISSION RUBBER

Mission Rubber is part of the California based worldwide Mission Rubber group of companies; **the inventors of the rubber flexible coupling** over 60 years ago.

Since 2006, Mission Rubber UK has held a facility in Ecclessfield to service the Civils and Drainage industry with the support of Mucher Dichtungen. Developing, manufacturing and distributing couplings and seals for all pipe materials used in the low pressure civils and drainage industry. In general Mission Rubber products are used when two pipes need joining. Mission Rubber can specify a custom requirement is needed to find a long term reliable solution.

Whereas Mission's core business used to be in the civils and drainage industry only, nowadays the business fields have been extended and include plumbing, industry and OEM solutions.

Due to working closely with various pipe manufactures, combined with the long-term presence on the European market place, a product range has been formed that offers a reliable and permanent solution for almost any possible application. Especially the sealing technologies for repair solutions require a wide knowledge and expertise for all the different pipe materials and connection systems.

Our Sheffield facility includes a dedicated manufacturing area designed for customized solutions where, with its 60 years' experience, can identify and provide the right sealing solution. Our highly trained team have the ability to manufacture the correct solution quickly, and effectively, to direct to site when then need it.

The majority of the product range is manufactured by Mission Rubbers' parent company Mücher Dichtungen at the European headquarters in Frechen, near Cologne. Mucher currently distribute to over 30 different Countries with Mission Rubber UK supplying all across England, Wales, Scotland and Ireland.

Together with its customers Mission Rubber and Mücher are permanently developing new and innovative products for below and above ground applications. Our products are known for their high quality, for being easy to install and for solving problems on site. A good example of a new product development is the Multi-Flexible- coupling GENIUS.

New product developments are tested in our own test laboratory against all requirements resulting from the relevant standard. Any new developed seal will run through both material and functional tests. Before any product launch the new developed seal will be tested on live sites to ensure it fulfils all requirements and ease of installation on site.

OUR COMMITMENT

SUMMARIZES THE KEY COMPETENCE OF THE COMPANY.

GUIDANCE + DELIVERY + INNOVATION + AVAILABILITY + SECURITY

GUIDANCE

You can trust that we are consulting you the right way!
Both commercial and technical consulting have got our highest priority. It is our ambition to offer solutions to our customers that are both technically reliable and commercially sustainable. The competence of our Sales & Technical team is outstanding and will continue to develop through training courses and further education.

The guideline to improve our support and consulting further is described in our quality management system according to BS EN ISO 9001:2015 which was launched over 25 years ago.

DELIVERY

3 p.m. Cut Off – Can be supplied next day!
Any orders received by 3pm with standard stocked sizes can be supplied next day either for stock or directly to site. Any custom sizes or large couplings can also be supplied next day depending on production availability. Overnight delivery fees apply.

INNOVATION

Our innovations help improving problems on site!
It is our companies aim to develop new products and to improve and further develop the existing range of products through rivaling new and innovative technologies. A good example is the initial launch of the TOX®-Technology to the sewerage industry. The TOX®-Technology eliminates the corrosion of the stainless steel components and increases the life circle.

AVAILABILITY

100% availability creates confidence!
Our entire product range is stocked in bulk. This includes both core range items with a high turn around as well as special items with a lower demand. The manufacturing department is the heart of our company. This is where we manufacture bespoke made large standard couplings and bushes on special customer demands and on time.

Our 100% availability and delivery capacity allows us to offer a proper solution for almost any problem within the sewerage industry.

SECURITY

On the safe side!
All our products comply with and exceed the requirements of the latest BS EN standards as well as national and international approvals. If it says MISSION you can depend on a safe installation process for the installer.

The high quality standards and certifications assume a life circle for Mission couplings of 50 years, providing proper packaging, stocking and installation.

INNOVATION

Couplings and other Mission joints and rings are constantly developed further, both in product design and material. They are characterised by quality, long-life cycle and user friendliness. **Our innovations are in the detail!**

TOX®-TECHNOLOGY

Traditional shear band fabrication entails spot welding of clamps to the shear band. Whereas with TOX®-TECHNOLOGY heat created during the welding process actually burns the stainless steel. The composition of the stainless steel is attached and intercrystalline corrosion can result at the welding points.

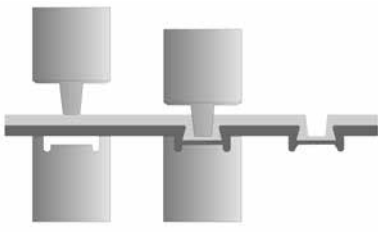

The shear bands on Mission couplings incorporate the latest in stainless steel fastening techniques:

TOX®-TECHNOLOGY (Clinching process, no spot welds)

The negative aspects associated with spot welding are eliminated in this advance process, yet the bond meets or exceeds all relevant tensile strength and shear requirements.

Properties	TOX®-Point	Spot Weld
Corrosion	none	yes
Structural Change	none	yes
Dynamic Resilience	excellent	not perfect
Static Resilience	good	excellent
Energy Input	minimal	extremely high
Environment friendly manufacturing	excellent	bad (steams)

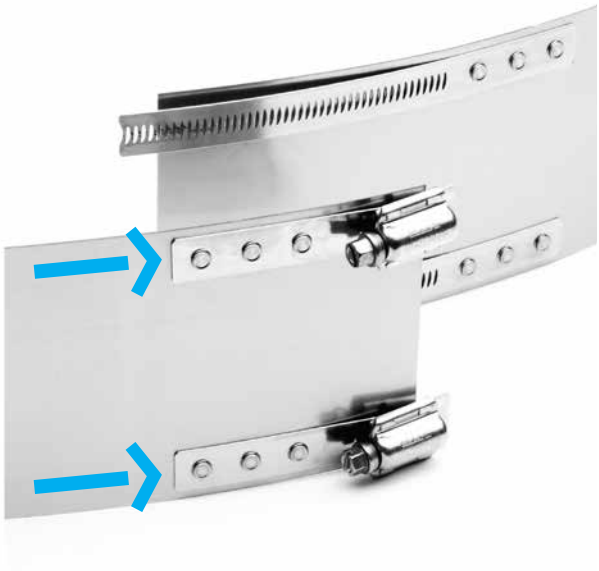

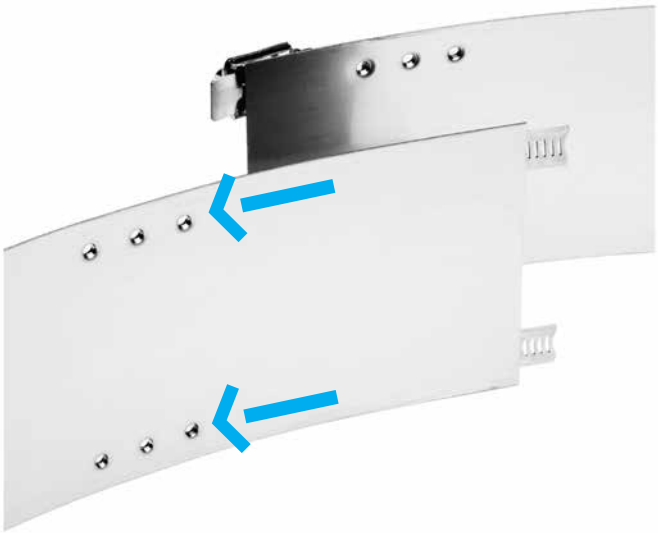

SALT SPRAY TEST SHOWS DIFFERENT CORROSION RESISTANCES

In a salt spray test according to DIN 50 021 SS (neutral) the different corrosion resistances of spot welded and toxed connection were compared.

Test Certificate No. 22000197 MPA NRW

After only a few days a clear corrosion was visible on the spot welded test blocks.
The toxed (clinched) stainless steel bands did not show any corrosion after 504 hours (test ended after 3 weeks).

Spot Welded

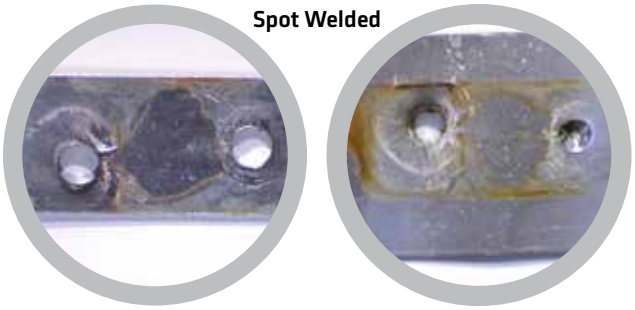

Toxed

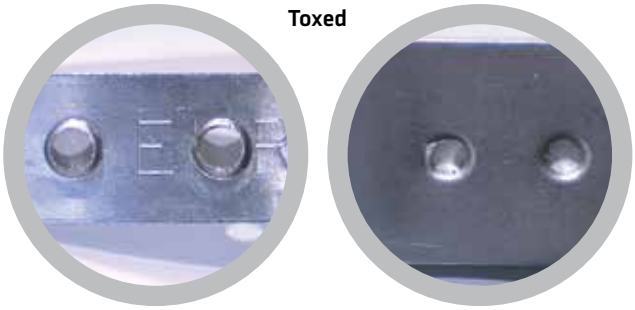

ADVANCED BOLTING SYSTEM

All of Missions large diameter couplings (from MSC 635) and all extra wide couplings are fitted with the all new advanced bolting system. Choosing the right clamp type (hi-torque, medium duty or bolted) and applying the right tightening torque is essential for large diameter couplings.

The bolting system is manufactured from stainless steel grade 1.4401 (AISI 316). It is positioned on the EPDM rubber sleeve and ensures the necessary compression to form a permanently sealed joint.

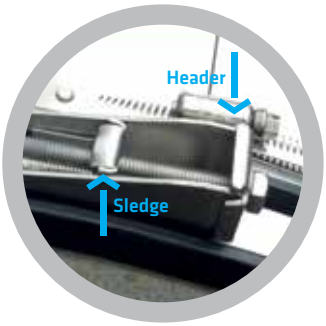

The purpose of this new development is to make the installation of the coupling to the pipe considerably quicker and much easier. The new bolting system has been engineered so that the sledge runs through the header casing, eliminating any protrusion of the bolt head.

This enables the installer to use a standard 13mm socket wrench which will reduce installation time by more than 50%.

Compared to other bolting systems, the advanced Mission bolting systems offers the following advantages:
- Even better sealing performance by wider clamps
- Easier installation by sledge system running through header
- Twice as quick to install than standard systems
- No special tools required, just use a standard 13 mm socket wrench
- Less risk of injury, therefore more health and safety conscious

„LOCK IN PLACE“ RUBBER PROFILE

Mission rubber sleeves are fitted with a unique rubber profile. The “lock in place” profile made from EPDM rubber ensures that the clamps and shear band are properly positioned on the sleeve and remain firmly in place during transit, stocking or installation on site.

The necessary compression of the rubber sleeve can only be guaranteed by a proper positioning of the stainless steel components.

Furthermore to the external based “lock in place” profile, the internal based sealing lines achieve a better sealing effect. Through the stepped sealing lines, additional EPDM sealing material can be compressed. This is of special advantage for sewerage pipes with a rough surface such as concrete pipes.

STAINLESS STEELS

Stainless steel refers to a range of iron based alloys which rely on their chromium content for resistance to corrosion. Research in a number of countries worldwide has shown that in normal soils austenitic stainless steel with a 17% chromium and 9% nickel content gives satisfactory performance, with a design life in excess of 100 years.

Whereas in poorly drained gravels, industrial or colliery spoil and in cases where the ground or groundwater contains chlorides (exceeding 1000 ppm) pitting of the steel can occur. In these circumstances the application of a protective wrapping such as "Denso tape" will give adequate protection. Alternatively, in these circumstances an austenitic stainless steel containing molybdenum (minimum 2%) will give better corrosion resistance without the need for additional protection.

Mission supplies two grades of austenitic stainless steel to suit either normal conditions or conditions when additional corrosion resistance is required. For use in normal conditions Missions standard products use components manufactured from grade 1.4301 (AISI 304) austenitic stainless steel to BS EN 10088-2. For those conditions requiring higher corrosion resistance then components manufactured from grade 1.4401 (AISI 316) austenitic stainless steel to BS EN 10088-2 is available, too. This grade contains 2% molybdenum and is especially suitable for marine environments.

BS EN 100 88	Trade Name	International Term	COMPOUNDS-%			
			Carbon (C)	Chromium (Cr)	Nickel (Ni)	Molybdenum (Mo)
1.4301	V2A	BS 304 / AISI 304	≤ 0,07	17,5-19,5	8,0-10,5	-
alternatively						
1.4307	V2A	BS 304 / AISI 304	≤ 0,03	17,5-19,5	8,0-10,0	-
1.4567	V2A	BS 304 / AISI 304	≤ 0,04	17,0-19,0	8,5-10,5	-
1.4404	V4A	BS 316 / AISI 316	≤ 0,03	16,5-18,5	10,0-13,0	2,0-2,5
alternatively						
1.4401	V4A	BS 316 / AISI 316	≤ 0,07	16,5-18,5	10,5-13,5	2,0-2,5
1.4571	V4A	BS 316 / AISI 316	≤ 0,08	16,5-18,5	10,5-13,5	2,0-2,5

The welding of stainless steel requires special competence and care as the steel can potentially corrode, resulting in an intercrystalline attack.

Since 2001 Mission successfully applies the TOX®-Technology which makes corrosion almost impossible.

CAOUTCHOUC ELASTOMERS

Rubber is a very flexible and elastic material with a high restoring force. In the technical application this material is officially named elastomer.

Deformation within the elastic range can be repeated limitless times without the change of the initial shape. As soon as the deformation forces are released, the elastomer returns back into its initial shape.

Elastomers are resistant against many acids, leaches and aromatic hydrocarbons which appear in the private, public and industrial sewage. For the sealing technology it is important to estimate this resistance, knowing the conditions of the joint such as the concentration of the medium, temperature, pressure as well as the static and dynamic strains.

The ideal elastomer material which is resistant to all gases and fluids does not exist yet. It is necessary to select the material which is the most suitable to meet the requirements demanded.

The most common elastomer types used in the sewage technology are EPDM, SBR, NBR, NR and FKM which all meet the current standards, such as BS EN 4060 and BS EN 681.

RESISTANCE OF ELASTOMERS

The following listed values are for guidance only. The values and characteristics cannot generally be transferred to all operating conditions.

PROPERTIES	EDPM	SBR	NBR	NR	FKM
Ozone Resistance	1	4	4	4	2
Oil Resistance	4	5	2	6	1
Fuel Resistance	5	6	2	6	1
Acid Resistance	1	3	4	3	1
Leach Resistance	1	3	4	3	1
Gas Permeability	4	4	2	5	2
Electric Resistance	2	2	5	1	2
Rebound Resilience	3	3	3	2	3
Tear Strength	3	2	2	1	2
Temperature Resistance	-40° bis + 120°C	-40° bis + 80°C	-30° bis + 100°C	-40° bis + 80°C	-40° bis + 200°C
Temporary max. Temperature	+ 160°C	+ 130°C	+ 130°C	+ 130°C	+ 230°C

1 = excellent 2 = good 3 = satisfactory 4 = sufficient 5 = poor 6 = fail

SHORT DISCRIPTION OF CAOUTCHOUC TYPES

EPDM (Ethylene – Propylene – Diene – Monomer)
Contains extraordinary resistance to oxygen, ozone and further atmospheric influences. UV-light resistant.

SBR (Styrene Butadiene Rubber)
One of the major synthetic rubbers with similar properties as natural rubber (NR). Compared to NR the abrasion resistance of SBR is superior but with an associated deterioration of the elasticity.

NBR (Acrylonitrile Butadiene Rubber)
The basis for NBR is a mixture of acrylonitrile and butadiene. The higher the acryl percentage, the better the resistance against mineral oils and fuels but with an associated deterioration of the elasticity and the cold flexibility.

NR (Natural Rubber)
The raw material is latex milk, extracted from caoutchouc trees. Unlike several synthetic rubbers, NR particularly possesses excellent elastic qualities.

FKM (Fluorinated Rubber)
FKM is a copolymer of highly fluorinated hydrocarbon and has very good resistance to media, ozone and aging. It is used in particular for applications with high process temperatures and aggressive media.

QUALITY MANAGEMENT SYSTEM, CE-MARKING

Mission Rubber UK has a quality management system according to BS EN ISO 9001:2015. The guideline for manufacturing, product development, sales and distribution. Developing the quality management system further is one of our European strategic aims.

The compliance of Mission Rubber products are to all UK standards and approvals allows Mision Rubber to UKCA-mark its products. With the UKCA marking, Mission Rubber UK declares that all products meet the requirements of the following standards both for functional and material .

CE 06 BS EN 295-4

LRQA CERTIFIED ISO 9001

CE 06 BS EN 681

wrc approved PT/413/0118

UK CA

WIS 4-41-01

Standard Couplings and Bushes (up to 620 mm diameter) comply with the requirements of Water Industry Specification WIS 4-41-01 „Specification for flexible couplings for gravity sewerage and drainage pipes“.

MISSION RUBBER — **Declaration of Performance**

The Construction Products (Amendment etc.) (EU Exit) Regulations 2020 No 1359

DoP Reference No: DoP-01 Couplings & Adapters UKCA

Product Identification Code: Type

Mission Rubber products defined as follows

Type:	Reference:	Size Range [mm]
Multi-Flexible Coupling GENIUS	GENIUS DN 100 – GENIUS DN 300	100 - 390
Standard Coupling	MSC 65 – MSC 620	55 - 620
Large Coupling	MLC 600 – MLC 2000	600 – 2000
Extra Wide Coupling	MSC 250W – MSC 620W	225 - 620
Extra Wide Large Coupling	MLC 600W – MLC 2000W	600 - 2000
Drain Coupling	MDC 32 – MDC 290	27 – 200
Adapter Coupling	MAC 0401 – MAC 5550	24 - 510
Bushes	BC	-

Intended use: Rubber Flexible Couplings and transition components for use in buried drain or sewer systems for the conveyance of wastewater (including domestic wastewater, surface water and rainwater) under gravity and periodic hydraulic surcharge or under continuous low head of pressure.

Manufacturer/Supplier: MISSION RUBBER (UK) Ltd., Atlas Business Park, Starnhill Close, Sheffield, S35 9TG, UK

System of assessment and verification of constancy of performance: System 4

Covered by harmonised standard: BS EN 295-4:2013

Notified Body: Not applicable – Products within scope of System 4

Declared Performance:

Essential Characteristics	Performance	Harmonised Technical Specification
Reaction to fire	Class F – Not tested due to end use situation	BS EN 295-4:2013
Dimensional tolerance - Moulded rubber - Extruded rubber adaptors & type 1 couplings - Type 2 couplings	Pass	
Tightness - Watertightness	Pass	
Release of dangerous substances	NPD	
Durability of tightness against - Chemical resistance to effluent - Thermal cycling stability - Long term stability	Pass	

The performance of the product identified is in conformity with the declared performance. This declaration of performance is issued under the sole responsibility of the supplier.

Signed for and on behalf of the manufacturer by:

Dipl.-Wi.-Ing. (TH) Michael Paeffgen
Managing Director

Sheffield, June 2022

MISSION RUBBER (UK) Limited
Atlas Business Park, Starnhill Close, Sheffield, S35 9TG, United Kingdom
Phone: +44 (0) 114 257 0040 Fax: +44 (0) 114 257 1722 www.missionrubber.co.uk

CONSTRUCTION PRODUCTS REGULATION

The European construction products regulation is in place since 01.07.2013.

As a manufacturer of building and construction products, Mücher Dichtungen® declares the conformity of all products according to the European standards and approvals in its declaration of performance.

FLEXIBLE COUPLING STANDARDS

Since the introduction of the UKCA mark. Mission Rubber UK Limited have introduced the correct standards to conform with the requirements in the UK Market. Until 2014 couplings with and without shear band were only standardized in the BS EN 295-4 when used with clay pipes.

Mission Rubber UK, with the support and testing facilities of Mücher, secures its high product quality and the compliance with the UK standards. **Mission Rubber is able to proof test results and compliances although the external quality control is no longer obligatory.**

Multi-Flexible-Coupling

GENIUS

+ One coupling for all pipe materials
+ For above and below ground
+ With integrated bushes
+ Resistant to 2.5 bar

Multi-Flexible-Coupling GENIUS – for the connection of all pipe systems with different or same outside diameters
The Multi-Flexible-Coupling GENIUS with integrated bushes connects all plain ended pipes within one dimension and can be used inside and outside of buildings.

The right solution always to hand: What ever pipe material needs to be jointed within one dimension, the GENIUS will always be the right solution for the contractor.

CE 06 BS EN 295-4 | CE 06 BS EN 681 | UK CA | LRQA CERTIFIED ISO 9001

INSTALLATION

Bush at smaller pipe remains integrated – fold out and remove bush at larger pipe.

Slide GENIUS over larger pipe.

Push smaller pipe into GENIUS and tighten clamps and shear band reciprocally.

DESCRIPTION

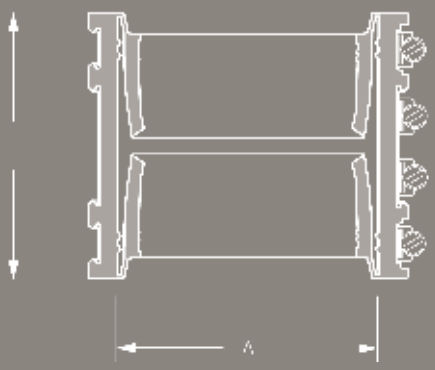

TECHNICAL SPECIFICATION

Mult-Flexible-Coupling GENIUS with integrated bushes connects all plain ended pipe materials within one dimension with different or same outside diameters.

Pipe 1	DN/Material _____
Pipe 2	DN/Material _____
Article Number	_____
	____ Qty ____ Price/Unit ____ Total
Manufacturer:	MISSION RUBBER (UK) LTD., Sheffield, S35 9TG T +44 (0) 114 257 - 0040
Pressure Tightness:	2.5 bar water / -0.3 bar vacuum
Jetting Resistance:	120 bar
Corrosion Resistance:	TOX®-Technology
Sealing Material:	EPDM or Nitrile (NBR) rubber with lock in place profile according to BS EN 681-1
Stainless Steel:	AISI 304/1.4301, alternatively AISI 316/1.4404 according to BS EN 10088-2
Temperature Resistance:	-40°C to +120°C, temporary max. temperature +160°C
Standard/Approval:	BS EN 295-4

PRODUCT RANGE

MULTI-FLEXIBLE-COUPLING GENIUS						
Article Number	Reference	A Size Range (mm)	L Length (mm)	resistant to (bar)	Nm	Weight (kg)
84000100	GENIUS DN 100	108-137	120	2,5	10	1,3
84000125	GENIUS DN 125	123-162	120	2,5	10	1,5
84000150	GENIUS DN 150	158-192	150	2,5	10	2,4
84000200	GENIUS DN 200	198-265	150	2,5	10	3,2
84000250	GENIUS DN 250	248-326	150	2,5	13	6,1
84000300	GENIUS DN 300	313-385	190	2,5	13	8,1

APPLICATION SCHEDULES

DN 100	GENIUS-OPTION Size Range (mm)	DN 125	GENIUS-OPTION Size Range (mm)	DN 150	GENIUS-OPTION Size Range (mm)
If the pipe OD is between 108mm and 125mm the inner bush needs to remain.		If the pipe OD is between 123mm and 150mm the inner bush needs to remain.		If the pipe OD is between 158mm and 176mm the inner bush needs to remain.	
	108-125 125-137		123-150 150-162		158-176 176-192
If the pipe OD is between 125mm and 137mm the inner bush needs removing.		If the pipe OD is between 150mm and 162mm the inner bush needs removing.		If the pipe OD is between 176mm and 192mm the inner bush needs removing.	

DN 200	GENIUS-OPTION Size Range (mm)	DN 250	GENIUS-OPTION Size Range (mm)	DN 300	GENIUS-OPTION Size Range (mm)
If the pipe OD is between 198mm and 231mm the inner bush needs to remain.		If the pipe OD is between 248mm and 285mm the inner bush needs to remain.		If the pipe OD is between 313mm and 342mm the inner bush needs to remain.	
	198-231 231-265		248-285 285-326		313-342 342-385
If the pipe OD is between 231mm and 265mm the inner bush needs removing.		If the pipe OD is between 285mm and 326mm the inner bush needs removing.		If the pipe OD is between 342mm and 285mm the inner bush needs removing.	

Standard Coupling

MSC TYPE 2B

+ For all pipe materials
+ For above and below ground
+ For usage with bushes
+ Resistant to 2.5 bar

Standard Coupling Type 2B – for the connection of all pipe systems with different or same outside diameters
The Standard Coupling Type 2B connects all plain ended pipes within same or different dimensions and is compensating differences in outside diameters of max. 12 mm. Larger differences will require the use of bushes.

The Standard Coupling Type 2B can be used for applications above and below ground as well as inside and outside of buildings.

CE 06 BS EN 295-4 | CE 06 BS EN 681 | UK CA | LRQA CERTIFIED ISO 9001

INSTALLATION

Position plain ended pipes.

Slide coupling over one plain end.

Center coupling over joint. Tighten clamps and shear band reciprocally.

DESCRIPTION

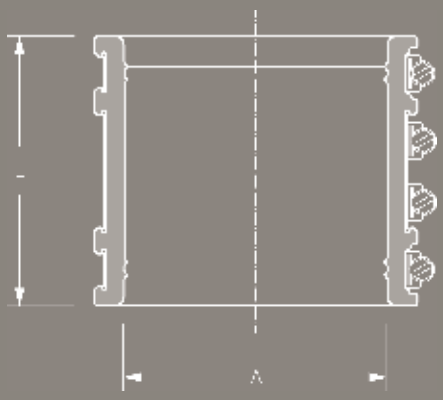

TECHNICAL SPECIFICATION

Standard Coupling Type 2B for connection of all plain ended pipe materials with different or same outside diameters for applications above and below ground as well as inside and outside of buildings. Differences in outside diameters of more than 12 mm will require the use of bushes.

Pipe 1	DN/Material _____
Pipe 2	DN/Material _____
Article Number	_____
	____ Qty ____ Price/Unit ____ Total
Manufacturer:	MISSION RUBBER (UK) LTD., Sheffield, S35 9TG T +44 (0) 114 257 - 0040
Pressure Tightness:	2.5 bar water / -0.3 bar vacuum
Jetting Resistance:	120 bar
Corrosion Resistance:	TOX®-Technology
Sealing Material:	EPDM or Nitrile (NBR) rubber with lock in place profile according to BS EN 681-1
Stainless Steel:	AISI 304/1.4301, alternatively AISI 316/1.4404 according to BS EN 10088-2
Temperature Resistance:	-40°C to +120°C, temporary max. temperature +160°C
Standard/Approval:	BS EN 295-4

PRODUCT RANGE

STANDARD COUPLING MSC TYPE 2B FOR ALL PIPE MATERIALS						
Article Number	Reference	A Size Range (mm)	L Length (mm)	resistant to (bar)	Nm	Weight (kg)
74000050	MSC 50	42-50	90	2,5	6	0,1
74000065	MSC 65	55-65	90	2,5	6	0,3
74000075	MSC 75	65-75	90	2,5	6	0,3
74000089	MSC 89	75-89	100	2,5	6	0,4
74000100	MSC 100	85-100	100	2,5	6	0,5
79000115	MSC 115	100-115	120	2,5	6	0,8
79000120	MSC 120	105-120	120	2,5	6	0,9
79000125	MSC 125	110-125	120	2,5	6	0,9
73100137	MSC 137	120-137	120	2,5	6	0,9
79000150	MSC 150	125-150	120	2,5	6	1,0
73125162	MSC 162	137-162	120	2,5	6	1,1
79000175	MSC 175	150-175	120	2,5	6	1,2
79000185	MSC 185	165-185	120	2,5	6	1,2
79000190	MSC 190	165-190	120	2,5	6	1,6
73150200	MSC 200	175-200	150	2,5	10	1,7
79000212	MSC 212	187-212	150	2,5	10	1,8
79000225	MSC 225	200-225	150	2,5	10	1,9
73200250	MSC 250	225-250	150	2,5	10	2,0
73200275	MSC 275	250-275	150	2,5	10	2,3
79000290	MSC 290	265-290	150	2,5	10	3,4
73250310	MSC 310	285-310	190	2,5	13	3,5
79000320	MSC 320	290-320	190	2,5	13	3,7
73250335	MSC 335	310-335	190	2,5	13	3,8
79000350	MSC 350	325-350	190	2,5	13	3,9
73300360	MSC 360	335-360	190	2,5	13	4,0
73300385	MSC 385	355-385	190	2,5	13	4,3
79000410	MSC 410	385-410	190	2,5	13	4,5
73350430	MSC 430	400-430	190	2,5	13	4,7
79000445	MSC 445	415-445	190	2,5	13	4,9
79000465	MSC 465	435-465	190	2,5	13	5,1
73400495	MSC 495	465-495	190	2,5	13	5,2
73400510	MSC 510	480-510	190	2,5	13	5,4
79000525	MSC 525	495-525	190	2,5	13	5,5
79000545	MSC 545	515-545	190	2,5	13	5,7
79000560	MSC 560	530-560	190	2,5	13	5,9
79000570	MSC 570	540-570	190	2,5	13	6,1
73500600	MSC 600	570-600	190	2,5	13	6,3
73500620	MSC 620	590-620	190	2,5	13	6,4

Large Coupling

MLC LARGE COUPLING

+ For all pipe materials
+ For above and below ground
+ For usage with bushes
+ Resistant to 2.5 bar

Standard Coupling Type 2B – for the connection of all pipe systems with different or same outside diameters
The Standard Coupling Type 2B connects all plain ended pipes within same or different dimensions and is compensating differences in outside diameters of max. 12 mm. Larger differences will require the use of bushes.

The Standard Coupling Type 2B can be used for applications above and below ground as well as inside and outside of buildings.

CE 06 BS EN 295-4 | CE 06 BS EN 681 | UK CA | LRQA CERTIFIED ISO 9001

INSTALLATION

Position plain ended pipes.

Slide coupling over one plain end.

Center coupling over joint. Tighten clamps and shear band reciprocally.

DESCRIPTION

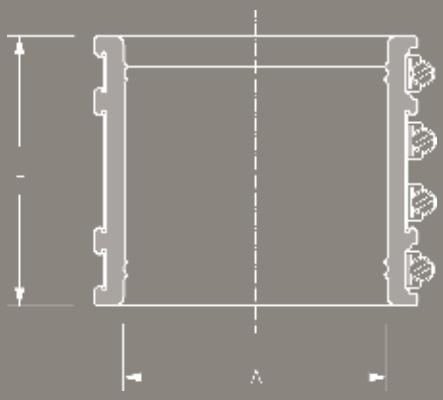

TECHNICAL SPECIFICATION

Standard Coupling Type 2B for connection of all plain ended pipe materials with different or same outside diameters for applications above and below ground as well as inside and outside of buildings. Differences in outside diameters of more than 12 mm will require the use of bushes.

Pipe 1	DN/Material _____
Pipe 2	DN/Material _____
Article Number	_____
	____ Qty ____ Price/Unit ____ Total
Manufacturer:	MISSION RUBBER (UK) LTD., Sheffield, S35 9TG T +44 (0) 114 257 - 0040
Pressure Tightness:	2.5 bar water / -0.3 bar vacuum
Jetting Resistance:	120 bar
Corrosion Resistance:	TOX®-Technology
Sealing Material:	EPDM or Nitrile (NBR) rubber with lock in place profile according to BS EN 681-1
Stainless Steel:	AISI 304/1.4301, alternatively AISI 316/1.4404 according to BS EN 10088-2
Temperature Resistance:	-40°C to +120°C, temporary max. temperature +160°C
Standard/Approval:	BS EN 295-4

PRODUCT RANGE

MLC LARGE COUPLING

Article Number	Reference	A Size Range (mm)	L Length (mm)	resistant to (bar)	Nm	Weight (kg)
79000635	MLC 635	620-635	190	1,0	20	7,2
79000650	MLC 650	635-650	190	1,0	20	7,4
79000665	MLC 665	650-665	190	1,0	20	7,5
79000680	MLC 680	665-680	190	1,0	20	7,7
79000695	MLC 695	680-695	190	1,0	20	7,8
73600700	MLC 700	670-700	190	1,0	20	7,9
79000710	MLC 710	695-710	190	1,0	20	8,0
79000725	MLC 725	710-725	190	1,0	20	8,2
73600735	MLC 735	705-735	190	1,0	20	8,3
79000740	MLC 740	725-740	190	1,0	20	8,3
79000755	MLC 755	740-755	190	1,0	20	8,5
79000770	MLC 770	755-770	190	1,0	20	8,7
79000785	MLC 785	770-785	190	1,0	20	8,8
79000800	MLC 800	785-800	190	1,0	20	9,0
79000805	MLC 805	775-805	190	1,0	20	9,1
79000815	MLC 815	800-815	190	1,0	20	9,2
79000830	MLC 830	815-830	190	1,0	20	9,3
79000845	MLC 845	830-845	190	1,0	20	9,5
73700850	MLC 850	820-850	190	1,0	20	9,6
79000860	MLC 860	845-860	190	1,0	20	9,7
79000875	MLC 875	850-875	190	1,0	20	9,8
79000890	MLC 890	875-890	190	1,0	20	10,0
79000905	MLC 905	890-905	190	1,0	20	10,1
79000915	MLC 915	885-915	190	1,0	20	10,3
79000920	MLC 920	905-920	190	1,0	20	10,3
79000935	MLC 935	920-935	190	1,0	20	10,5
73800950	MLC 950	920-950	190	1,0	20	10,6
79000965	MLC 965	950-965	190	1,0	20	10,8
79000975	MLC 975	945-975	190	1,0	20	10,8
79000980	MLC 980	965-980	190	1,0	20	11,0
79000995	MLC 995	980-995	190	1,0	20	11,1
79001010	MLC 1010	995-1010	190	0,6	20	11,3
79001025	MLC 1025	1010-1025	190	0,6	20	11,5
79001040	MLC 1040	1025-1040	190	0,6	20	11,6
79001055	MLC 1055	1040-1055	190	0,6	20	11,8
79001070	MLC 1070	1055-1070	190	0,6	20	12,0
79001085	MLC 1085	1070-1085	190	0,6	20	12,1
79001100	MLC 1100	1085-1100	190	0,6	20	12,3
79001115	MLC 1115	1100-1115	190	0,6	20	12,5
79001130	MLC 1130	1115-1130	190	0,6	20	12,6
79001145	MLC 1145	1130-1145	190	0,6	20	12,8
79001160	MLC 1160	1145-1160	190	0,6	20	12,9
79001175	MLC 1175	1160-1175	190	0,6	20	13,1
79001190	MLC 1190	1175-1190	190	0,6	20	13,3
79001205	MLC 1205	1190-1205	190	0,6	25	13,4
79001220	MLC 1220	1205-1220	190	0,6	25	13,6
79001235	MLC 1235	1220-1235	190	0,6	25	13,8
79001250	MLC 1250	1235-1250	190	0,6	25	13,9
79001265	MLC 1265	1250-1265	190	0,6	25	14,1
79001280	MLC 1280	1265-1280	190	0,6	25	14,3
79001295	MLC 1295	1280-1295	190	0,6	25	14,4
79001310	MLC 1310	1295-1310	190	0,6	25	14,6
79001325	MLC 1325	1310-1325	190	0,6	25	14,8
79001340	MLC 1340	1325-1340	190	0,6	25	14,9
79001355	MLC 1355	1340-1355	190	0,6	25	15,1
79001370	MLC 1370	1355-1370	190	0,6	25	15,3

PRODUCT RANGE

MLC LARGE COUPLING

Article Number	Reference	A Size Range (mm)	L Length (mm)	resistant to (bar)	Nm	Weight (kg)
79001385	MLC 1385	1370-1385	190	0,6	25	15,4
79001400	MLC 1400	1385-1400	190	0,6	25	15,6
79001415	MLC 1415	1400-1415	190	-	25	15,8
79001430	MLC 1430	1415-1430	190	-	25	15,9
79001445	MLC 1445	1430-1445	190	-	25	16,1
79001460	MLC 1460	1445-1460	190	-	25	16,2
79001475	MLC 1475	1460-1475	190	-	25	16,4
79001490	MLC 1490	1475-1490	190	-	25	16,6
79001505	MLC 1505	1490-1505	190	-	25	16,7
79001520	MLC 1520	1505-1520	190	-	25	16,9
79001535	MLC 1535	1520-1535	190	-	25	17,1
79001550	MLC 1550	1535-1550	190	-	25	17,2
79001565	MLC 1565	1550-1565	190	-	25	17,4
79001580	MLC 1580	1565-1580	190	-	25	17,6
79001595	MLC 1595	1580-1595	190	-	25	17,7
79001610	MLC 1610	1595-1610	190	-	25	17,9
79001625	MLC 1625	1610-1625	190	-	25	18,1
79001640	MLC 1640	1625-1640	190	-	25	18,2
79001655	MLC 1655	1640-1655	190	-	25	18,4
79001670	MLC 1670	1655-1670	190	-	25	18,6
79001685	MLC 1685	1670-1685	190	-	25	18,7
79001700	MLC 1700	1685-1700	190	-	25	18,9
79001715	MLC 1715	1700-1715	190	-	25	19,0
79001730	MLC 1730	1715 - 1730	190	-	25	19,2
79001745	MLC 1745	1730 - 1745	190	-	25	19,4
79001760	MLC 1760	1745 - 1760	190	-	25	19,5
79001775	MLC 1775	1760 - 1775	190	-	25	19,7
79001790	MLC 1790	1775 - 1790	190	-	25	19,9
79001805	MLC 1805	1790 - 1805	190	-	25	20,1
79001820	MLC 1820	1805 - 1820	190	-	25	20,2
79001835	MLC 1835	1820 - 1835	190	-	25	20,4
79001850	MLC 1850	1835 - 1850	190	-	25	20,6
79001865	MLC 1865	1850 - 1865	190	-	25	20,7
79001880	MLC 1880	1865 - 1880	190	-	25	20,8
79001895	MLC 1895	1880 - 1895	190	-	25	21,0
79001910	MLC 1910	1895 - 1910	190	-	25	21,2
79001925	MLC 1925	1910 - 1925	190	-	25	21,4
79001940	MLC 1940	1925 - 1940	190	-	25	21,5
79001955	MLC 1955	1940 - 1955	190	-	25	21,7
79001970	MLC 1970	1955 - 1970	190	-	25	21,9
79001985	MLC 1985	1970 - 1985	190	-	25	22,0
79002000	MLC 2000	1985 - 2000	190	-	25	22,2

Larger sizes are available on request.

Rubber Bush

MBC RUBBER BUSH

+ For compensating different outside diameters
+ In combination with Standard Coupling
+ Extra tightness through pretension
+ Resistant to 2.5 bar

Rubber Bush material – in combination with Standard Coupling – is to bridge the gap between pipes when the outside diameter has a difference of 12mm.

By combining multiple bushes made from different thicknesses (5, 8, 9, 14, 24, 32 and 40 mm) almost any connection can be achieved ensuring a tight fit.

Bushes are manufactured with pretension and tighten against each other.

CE 06 BS EN 681 · UK CA · LRQA CERTIFIED ISO 9001

INSTALLATION

Slide coupling completely over larger plain end.

Slide bush over smaller plain end and position bush properly.

Center coupling over joint. Tighten clamps and shear band reciprocally.

DESCRIPTION

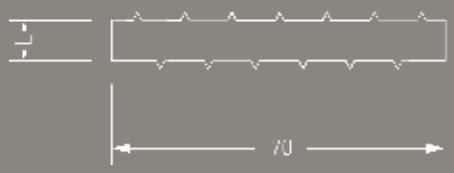

TECHNICAL SPECIFICATION

Bushes with pretension for compensating larger outside diameter differences. Outside diameter differences need to be taken on site.

Pipe 1	DN/Material	_____
Pipe 2	DN/Material	_____
Article Number	_____	
	____ Qty ____ Price/Unit ____ Total	
Manufacturer:	MISSION RUBBER (UK) LTD., Sheffield, S35 9TG T +44 (0) 114 257 - 0040	
Pressure Tightness:	2.5 bar water / -0.3 bar vacuum	
Jetting Resistance:	120 bar	
Corrosion Resistance:	TOX®-Technology	
Sealing Material:	EPDM or Nitrile (NBR) rubber with lock in place profile according to BS EN 681-1	
Temperature Resistance:	-40°C to +120°C, temporary max. temperature +160°C	
Standard/Approval:	BS EN 16397-2	

Extra Wide Coupling

MXL WIDE COUPLING

+ For all pipe materials
+ For above and below ground
+ Extra wide profile
+ Resistant to 2.5 bar

Extra Wide Coupling MXL – for safe connecting of large diameter pipes
The Extra Wide Coupling MXL connects all plain ended pipes within same or different dimensions and is compensating differences in outside diameters of max. 12 mm. Larger differences will require the use of bushes.

The extra wide profile allows a safe and flexible laying of large diameter pipes from DN 800.

CE 06 BS EN 681 · UK CA · LRQA CERTIFIED ISO 9001

INSTALLATION

Position plain ended pipes.

Slide coupling over one plain end.

Center coupling over joint. Tighten clamps and shear band reciprocally.

DESCRIPTION

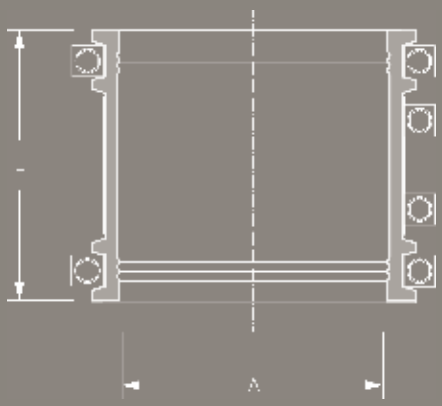

TECHNICAL SPECIFICATION

Extra Wide Coupling MXL for connecting all plain ended pipe materials with different or same outside diameters for applications above and below ground. Differences in outside diameters of more than 12 mm will require the use of bushes.

Pipe 1	DN/Material _____
Pipe 2	DN/Material _____
Article Number	_____
	____ Qty ____ Price/Unit ____ Total
Manufacturer:	MISSION RUBBER (UK) LTD., Sheffield, S35 9TG T +44 (0) 114 257 - 0040
Pressure Tightness:	2.5 bar water / -0.3 bar vacuum
Jetting Resistance:	120 bar
Corrosion Resistance:	TOX®-Technology
Sealing Material:	EPDM or Nitrile (NBR) rubber with lock in place profile according to BS EN 681-1
Stainless Steel:	AISI 304/1.4301, alternatively AISI 316/1.4404 according to BS EN 10088-2
Temperature Resistance:	-40°C to +120°C, temporary max. temperature +160°C
Standard/Approval:	BS EN 681-1

PRODUCT RANGE

MXL WIDE COUPLING

Article Number	Reference	A Size Range (mm)	L Length (mm)	resistant to (bar)	Nm	Weight (kg)
80000310	MXL 310	285-310	300	2,5	13	5,6
80000320	MXL 320	290-320	300	2,5	13	5,8
80000335	MXL 335	310-335	300	2,5	13	6,0
80000350	MXL 350	325-350	300	2,5	13	6,3
80000360	MXL 360	335-360	300	2,5	13	6,5
80000385	MXL 385	355-385	300	2,5	13	7,0
80000410	MXL 410	385-410	300	2,5	13	7,4
80000430	MXL 430	400-430	300	2,5	13	7,8
80000445	MXL 445	415-445	300	2,5	13	8,1
80000465	MXL 465	435-465	300	2,5	13	8,6
80000495	MXL 495	465-495	300	2,5	13	9,0
80000510	MXL 510	480-510	300	2,5	13	9,3
80000525	MXL 525	495-525	300	2,5	13	9,8
80000545	MXL 545	515-545	300	2,5	13	10,2
80000560	MXL 560	530-560	300	2,5	13	10,7
80000570	MXL 570	540-570	300	2,5	13	11,1
80000600	MXL 600	570-600	300	2,5	13	11,5
80000620	MXL 620	590-620	300	2,5	13	11,9
80000635	MXL 635	620-635	300	1,0	20	12,3
80000650	MXL 650	635-650	300	1,0	20	12,6
80000665	MXL 665	650-665	300	1,0	20	13,0
80000680	MXL 680	665-680	300	1,0	20	13,4
80000695	MXL 695	680-695	300	1,0	20	13,8
80000700	MXL 700	670-700	300	1,0	20	13,9
80000710	MXL 710	695-710	300	1,0	20	14,1
80000725	MXL 725	710-725	300	1,0	20	14,5
80000735	MXL 735	705-735	300	1,0	20	14,9
80000740	MXL 740	725-740	300	1,0	20	14,3
80000755	MXL 755	740-755	300	1,0	20	14,7
80000770	MXL 770	755-770	300	1,0	20	15,0
80000785	MXL 785	770-785	300	1,0	20	15,3
80000800	MXL 800	785-800	300	1,0	20	15,7
80000805	MXL 805	775-805	300	1,0	20	16,1
80000815	MXL 815	800-815	300	1,0	20	16,4
80000830	MXL 830	815-830	300	1,0	20	16,8
80000845	MXL 845	830-845	300	1,0	20	17,1
80000860	MXL 860	845-860	300	1,0	20	17,5
80000875	MXL 875	850-875	300	1,0	20	17,8
80000890	MXL 890	875-890	300	1,0	20	18,1
80000905	MXL 905	890-905	300	1,0	20	18,5
80000915	MXL 915	885-915	300	1,0	20	18,8
80000920	MXL 920	905-920	300	1,0	20	19,1
80000935	MXL 935	920-935	300	1,0	20	19,5
80000950	MXL 950	935-950	300	1,0	20	19,8
80000965	MXL 965	950-965	300	1,0	20	20,2
80000975	MXL 975	945-975	300	1,0	20	20,5
80000980	MXL 980	965-980	300	1,0	20	20,9
80000995	MXL 995	980-995	300	1,0	20	21,3
80001010	MXL 1010	995-1010	300	0,6	20	21,7
80001025	MXL 1025	1010-1025	300	0,6	20	22,1
80001040	MXL 1040	1025-1040	300	0,6	20	22,5
80001055	MXL 1055	1040-1055	300	0,6	20	22,8
80001070	MXL 1070	1055-1070	300	0,6	20	23,1
80001085	MXL 1085	1070-1085	300	0,6	20	23,4
80001100	MXL 1100	1085-1100	300	0,6	20	23,8
80001115	MXL 1115	1100-1115	300	0,6	20	24,1
80001130	MXL 1130	1115-1130	300	0,6	20	24,5

PRODUCT RANGE

EXTRA WIDE COUPLING MXL

Article Number	Reference	A Size Range (mm)	L Length (mm)	resistant to (bar)	Nm	Weight (kg)
80001145	MXL 1145	1130-1145	300	0,6	20	24,8
80001160	MXL 1160	1145-1160	300	0,6	20	25,1
80001175	MXL 1175	1160-1175	300	0,6	20	25,4
80001190	MXL 1190	1175-1190	300	0,6	20	25,7
80001205	MXL 1205	1190-1205	300	0,6	25	26,0
80001220	MXL 1220	1205-1220	300	0,6	25	26,4
80001235	MXL 1235	1220-1235	300	0,6	25	26,8
80001250	MXL 1250	1235-1250	300	0,6	25	27,1
80001265	MXL 1265	1250-1265	300	0,6	25	27,5
80001280	MXL 1280	1265-1280	300	0,6	25	27,8
80001295	MXL 1295	1280-1295	300	0,6	25	28,1
80001310	MXL 1310	1295-1310	300	0,6	25	28,4
80001325	MXL 1325	1310-1325	300	0,6	25	28,7
80001340	MXL 1340	1325-1340	300	0,6	25	29,2
80001355	MXL 1355	1340-1355	300	0,6	25	29,6
80001370	MXL 1370	1355-1370	300	0,6	25	30,0
80001385	MXL 1385	1370-1385	300	0,6	25	30,4
80001400	MXL 1400	1385-1400	300	0,6	25	30,8
80001415	MXL 1415	1400-1415	300	-	30	31,2
80001430	MXL 1430	1415-1430	300	-	30	31,6
80001445	MXL 1445	1430-1445	300	-	30	32,0
80001460	MXL 1460	1445-1460	300	-	30	32,4
80001475	MXL 1475	1460-1475	300	-	30	32,8
80001490	MXL 1490	1475-1490	300	-	30	33,2
80001505	MXL 1505	1490-1505	300	-	30	33,6
80001520	MXL 1520	1505-1520	300	-	30	34,0
80001535	MXL 1535	1520-1535	300	-	30	34,4
80001550	MXL 1550	1535-1550	300	-	30	34,8
80001565	MXL 1565	1550-1565	300	-	30	35,2
80001580	MXL 1580	1565-1580	300	-	30	35,6
80001595	MXL 1595	1580-1595	300	-	30	36,0
80001610	MXL 1610	1595-1610	300	-	30	36,4
80001625	MXL 1625	1610-1625	300	-	30	36,8
80001640	MXL 1640	1625-1640	300	-	30	37,2
80001655	MXL 1655	1640-1655	300	-	30	37,6
80001670	MXL 1670	1655-1670	300	-	30	38,0
80001685	MXL 1685	1670-1685	300	-	30	38,4
80001700	MXL 1700	1685-1700	300	-	30	38,8
80001715	MXL 1715	1700-1715	300	-	30	39,2
80001730	MXL 1730	1715-1730	300	-	30	39,6
80001745	MXL 1745	1730-1745	300	-	30	40,0
80001760	MXL 1760	1745-1760	300	-	30	40,4
80001775	MXL 1775	1760-1775	300	-	30	40,8
80001790	MXL 1790	1775-1790	300	-	30	41,2
80001805	MXL 1805	1790-1805	300	-	30	41,6
80001820	MXL 1820	1805-1820	300	-	30	42,0
80001835	MXL 1835	1820-1835	300	-	30	42,4
80001850	MXL 1850	1835-1850	300	-	30	42,8
80001865	MXL 1865	1850-1865	300	-	30	43,2
80001880	MXL 1880	1865-1880	300	-	30	43,6
80001895	MXL 1895	1880-1895	300	-	30	44,0
80001910	MXL 1910	1895-1910	300	-	30	44,4
80001925	MXL 1925	1910-1925	300	-	30	44,8
80001940	MXL 1940	1925-1940	300	-	30	45,2
80001955	MXL 1955	1940-1955	300	-	30	45,6
80001970	MXL 1970	1955-1970	300	-	30	46,0
80001985	MXL 1985	1970-1985	300	-	30	46,4

Larger sizes are available on request.

Coupling Kit

EASY-REP MER

+ For repair of damage or cracks
+ No stop of water flow
+ For above and below ground
+ Resistant to 0.5 bar

Coupling Kit EASY-REP – allows local repairs without stopping the water flow
EASY-REP is a rubber flexible repair coupling supplied in an easy to install kit form.

EASY-REP is designed to allow pipe repairs to be carried out to sewerage and drainage pipelines which have been subject to local damage or cracks, without the need to replace the section of pipe or even to stop the flow of water whilst carrying out the repair.

INSTALLATION

Coat rubber glue to the sleeve.

Tighten shear band reciprocally.

Tighten clamps.

DESCRIPTION

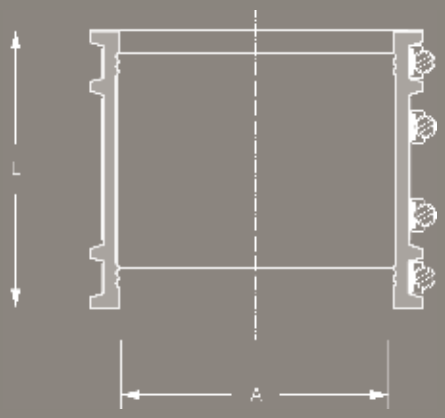

TECHNICAL SPECIFICATION

Coupling Kit EASY-REP for local repairs of damaged or cracked waste water pipes made from all materials. The outside diameter on the damaged pipe section needs to be taken on site.

Pipe	DN/Material _____
Article Number	_____
	____ Qty ____ Price/Unit ____ Total
Manufacturer:	MISSION RUBBER (UK) LTD., Sheffield, S35 9TG T +44 (0) 114 257 - 0040
Pressure Tightness:	0.5 bar water
Corrosion Resistance:	TOX®-Technology
Sealing Material:	EPDM rubber with lock in place profile according to BS EN 681-1
Stainless Steel:	AISI 304/1.4301, alternatively AISI 316/1.4404 according to BS EN 10088-2
Temperature Resistance:	-40°C to +120°C, temporary max. temperature +160°C
Standard/Approval:	BS EN 681-1, MPA Test Certificate No. 22 0008278

PRODUCT RANGE

COUPLING KIT EASY-REP MER						
Article Number	Reference	A Size Range (mm)	L Length (mm)	resistant to (bar)	Nm	Weight (kg)
83000310	EASY-REP MER 310	295-310	190	0,5	13	3,5
83000320	EASY-REP MER 320	305-320	190	0,5	13	3,7
83000330	EASY-REP MER 330	315-330	190	0,5	13	3,7
83000340	EASY-REP MER 340	325-340	190	0,5	13	3,9
83000350	EASY-REP MER 350	335-350	190	0,5	13	3,9
83000360	EASY-REP MER 360	345-360	190	0,5	13	4,0
83000370	EASY-REP MER 370	355-370	190	0,5	13	4,1
83000380	EASY-REP MER 380	365-380	190	0,5	13	4,2
83000390	EASY-REP MER 390	375-390	190	0,5	13	4,3
83000400	EASY-REP MER 400	385-400	190	0,5	13	4,4
83000410	EASY-REP MER 410	395-410	190	0,5	13	4,5
83000420	EASY-REP MER 420	405-420	190	0,5	13	4,6
83000430	EASY-REP MER 430	415-430	190	0,5	13	4,7
83000440	EASY-REP MER 440	425-440	190	0,5	13	4,8
83000450	EASY-REP MER 450	435-450	190	0,5	13	5,0
83000460	EASY-REP MER 460	445-460	190	0,5	13	5,0
83000470	EASY-REP MER 470	455-470	190	0,5	13	5,1
83000480	EASY-REP MER 480	465-480	190	0,5	13	5,1
83000490	EASY-REP MER 490	475-490	190	0,5	13	5,2
83000500	EASY-REP MER 500	485-500	190	0,5	13	5,3
83000510	EASY-REP MER 510	495-510	190	0,5	13	5,4
83000520	EASY-REP MER 520	505-520	190	0,5	13	5,5
83000530	EASY-REP MER 530	515-530	190	0,5	13	5,6
83000540	EASY-REP MER 540	525-540	190	0,5	13	5,7
83000550	EASY-REP MER 550	535-550	190	0,5	13	5,8
83000560	EASY-REP MER 560	545-560	190	0,5	13	5,9
83000570	EASY-REP MER 570	555-570	190	0,5	13	6,0
83000580	EASY-REP MER 580	565-580	190	0,5	13	6,1
83000590	EASY-REP MER 590	575-590	190	0,5	13	6,2
83000600	EASY-REP MER 600	585-600	190	0,5	13	6,3
83000610	EASY-REP MER 610	595-610	190	0,5	13	6,4
83000620	EASY-REP MER 620	605-620	190	0,5	13	6,5
83000630	EASY-REP MER 630	615-630	190	0,5	20	6,8
83000640	EASY-REP MER 640	625-640	190	0,5	20	7,2
83000650	EASY-REP MER 650	635-650	190	0,5	20	7,4
83000660	EASY-REP MER 660	645-660	190	0,5	20	7,5
83000670	EASY-REP MER 670	655-670	190	0,5	20	7,6
83000680	EASY-REP MER 680	665-680	190	0,5	20	7,7

Larger sizes are available on request.

Adaptor Coupling

MAC ADAPTOR COUPLING

+ Adaptor for different outside diameters
+ For above and below ground
+ Reliable and durable solution
+ Resistant to 0.6 bar

Adaptor Coupling MAC – for the connection of all pipe systems with different outside diameters
The Adaptor Coupling MAC joints all plain ended pipes with different outside diameters and materials.

The Adaptor Coupling MAC can be used for applications above and below ground as well as inside and outside of buildings.

When changing nominal diameters, the flow direction needs consideration.

CE 06 BS EN 295-4 | CE 06 BS EN 681 | UK CA | LRQA CERTIFIED ISO 9001

INSTALLATION

Position plain ended pipes.

Slide adaptor coupling over one plain end.

Push other plain ended pipe into adaptor coupling and tighten clamps.

DESCRIPTION

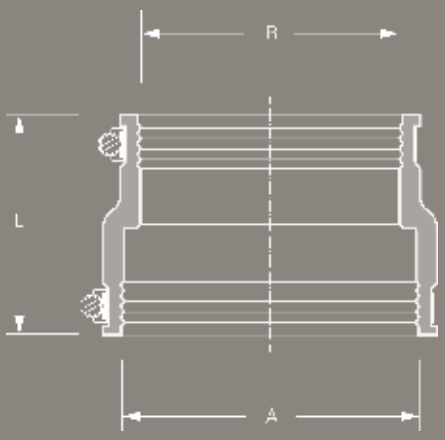

TECHNICAL SPECIFICATION

Adaptor Coupling MAC for the connection of all plain ended pipe systems with different outside diameters for applications above and below ground as well as inside and outside of buildings.

Pipe 1	DN/Material _____
Pipe 2	DN/Material _____
Article Number	_____
	____ Qty ____ Price/Unit ____ Total
Manufacturer:	MISSION RUBBER (UK) LTD., Sheffield, S35 9TG T +44 (0) 114 257 - 0040
Pressure Tightness:	0.6 bar water / -0.3 bar vacuum
Jetting Resistance:	120 bar
Sealing Material:	EPDM rubber with lock in place profile according to BS EN 681-1
Stainless Steel:	AISI 304/1.4301, alternatively AISI 316/1.4404 according to BS EN 10088-2
Temperature Resistance:	-40°C to +120°C, temporary max. temperature +160°C
Standard/Approval:	BS EN 295-4

PRODUCT RANGE

ADAPTOR COUPLING MAC

Article Number	Reference	A Size Range (mm)	B Size Range (mm)	L Length (mm)	resistant to (bar)	Nm	Weight (kg)
76000401	MAC 0401	32 - 40	24 - 32	65	0,6	3	0,1
76000501	MAC 0501	40 - 50	24 - 32	65	0,6	3	0,1
76000502	MAC 0502	40 - 50	32 - 40	65	0,6	3	0,1
76000632	MAC 0632	53 - 63	32 - 40	65	0,6	3	0,1
76000633	MAC 0633	53 - 63	40 - 50	90	0,6	3	0,2
76000893	MAC 0893	75 - 89	40 - 50	100	0,6	3	0,4
76000894	MAC 0894	75 - 89	53 - 63	100	0,6	3	0,3
76000853	MAC 1153	100 - 115	40 - 50	100	0,6	3	0,5
76001154	MAC 1154	100 - 115	53 - 63	100	0,6	3	0,3
76001155	MAC 1155	100 - 115	75 - 89	100	0,6	3	0,5
76001251	MAC 1251	110 - 125	80 - 95	120	0,6	6	0,6
76001252	MAC 1252	110 - 125	100 - 115	120	0,6	6	0,6
76001360	MAC 1360	121 - 136	75 - 89	100	0,6	6	0,6
76001361	MAC 1361	121 - 136	80 - 95	120	0,6	6	0,7
76001362	MAC 1362	121 - 136	100 - 115	120	0,6	6	0,6
76001363	MAC 1363	121 - 136	110 - 125	120	0,6	6	0,6
76004000	MAC 4000	121 - 137	108 - 122	120	0,6	6	0,6
76001451	MAC 1451	130 - 145	95 - 110	100	0,6	6	0,5
76001452	MAC 1452	130 - 145	110 - 125	120	0,6	6	0,7
76001501	MAC 1501	135 - 150	100 - 115	100	0,6	6	0,5
76001602	MAC 1602	144 - 160	110 - 125	120	0,6	6	0,8
76001603	MAC 1603	144 - 160	121 - 136	120	0,6	6	0,8
76001701	MAC 1701	155 - 170	100 - 115	150	0,6	6	1,0
76001702	MAC 1702	155 - 170	110 - 125	120	0,6	6	0,8
76001703	MAC 1703	155 - 170	130 - 145	120	0,6	6	0,8
76001801	MAC 1801	160 - 180	100 - 115	150	0,6	6	1,0
76001802	MAC 1802	160 - 180	110 - 125	150	0,6	6	1,1
76001805	MAC 1805	160 - 180	155 - 170	150	0,6	6	1,3
76001922	MAC 1922	170 - 192	110 - 125	120	0,6	6	0,9
76001923	MAC 1923	170 - 192	121 - 136	120	0,6	6	0,9
76001924	MAC 1924	170 - 192	144 - 160	120	0,6	6	0,9
76001991	MAC 1991	180 - 200	100 - 115	150	0,6	6	1,2
76001993	MAC 1993	180 - 200	121 - 136	150	0,6	6	1,2
76002000	MAC 2000	180 - 200	130 - 145	150	0,6	6	1,4
76002001	MAC 2001	180 - 200	155 - 170	150	0,6	6	1,3
76002002	MAC 6000 / MAC 2002	180 - 200	160 - 180	150	0,6	6	1,3
76002102	MAC 2102	185 - 210	110 - 125	150	0,6	6	1,3
76002104	MAC 2104	185 - 210	130 - 145	150	0,6	6	1,3
76002105	MAC 2105	185 - 210	144 - 160	150	0,6	6	1,2
76002152	MAC 2152 offset	200 - 215	100 - 115	150	0,6	6	1,0
76002203	MAC 2203	195 - 220	155 - 170	150	0,6	6	1,2
76002303	MAC 2303	205 - 230	130 - 145	165	0,6	6	1,8
76002352	MAC 2352	210 - 235	110 - 125	150	0,6	6	1,5
76002353	MAC 2353	210 - 235	121 - 136	150	0,6	6	1,5
76002354	MAC 2354	210 - 235	144 - 160	150	0,6	6	1,5
76002355	MAC 2355	210 - 235	170 - 192	150	0,6	6	1,5
76002356	MAC 2356	210 - 235	190 - 215	150	0,6	6	1,5
76002505	MAC 2505	225 - 250	155 - 170	150	0,6	6	1,4
76002507	MAC 2507	225 - 250	195 - 220	150	0,6	6	1,5
76002508	MAC 2508	225 - 250	205 - 230	150	0,6	6	1,6
76002654	MAC 2654	240 - 265	144 - 160	150	0,6	6	1,8
76002655	MAC 2655	240 - 265	170 - 192	150	0,6	6	1,7
76002656	MAC 2656	240 - 265	190 - 215	150	0,6	6	1,7
76002657	MAC 2657	240 - 265	210 - 235	150	0,6	6	1,7
76002753	MAC 2753	250 - 275	155 - 170	165	0,6	6	2,1
76002755	MAC 2755	250 - 275	195 - 220	165	0,6	6	2,3
76002904	MAC 2904	265 - 290	144 - 160	150	0,6	6	2,0

PRODUCT RANGE

ADAPTOR COUPLING MAC

Article Number	Reference	A Size Range (mm)	B Size Range (mm)	L Length (mm)	resistant to (bar)	Nm	Weight (kg)
76002905	MAC 2905	265 - 290	170 - 192	150	0,6	6	1,8
76002906	MAC 2906	265 - 290	190 - 215	150	0,6	6	2,0
76002907	MAC 2907	265 - 290	210 - 235	150	0,6	6	2,0
76002908	MAC 2908	265 - 290	240 - 265	150	0,6	6	1,9
76003003	MAC 3003 offset	275 - 300	180 - 200	150	0,6	6	1,4
76003157	MAC 3157	290 - 315	245 - 270	165	0,6	6	2,0
76003158	MAC 3158	290 - 315	260 - 285	165	0,6	6	2,1
76003204	MAC 3204	295 - 320	144 - 160	150	0,6	6	2,7
76003205	MAC 3205	295 - 320	170 - 192	150	0,6	6	2,6
76003206	MAC 3206	295 - 320	190 - 215	150	0,6	6	2,1
76003207	MAC 3207	295 - 320	210 - 235	150	0,6	6	2,5
76003208	MAC 3208	295 - 320	240 - 265	150	0,6	6	2,6
76003209	MAC 3209	295 - 320	265 - 290	150	0,6	6	2,5
76003257	MAC 3257	300 - 325	250 - 275	165	0,6	6	2,7
76003307	MAC 3307	305 - 330	245 - 270	150	0,6	6	1,7
76003351	MAC 3351 offset	310 - 335	180 - 205	150	0,6	6	2,2
76003357	MAC 3357	310 - 335	295 - 320	150	0,6	6	1,8
76003600	MAC 3600	335 - 360	295 - 320	165	0,6	6	3,1
76003606	MAC 3606	335 - 360	190 - 215	165	0,6	6	3,1
76003607	MAC 3607	335 - 360	210 - 235	165	0,6	6	3,0
76003608	MAC 3608	335 - 360	240 - 260	165	0,6	6	3,2
76003609	MAC 3609	335 - 360	265 - 290	165	0,6	6	3,1
76003708	MAC 3708	345 - 370	300 - 325	165	0,6	6	2,6
76003709	MAC 3709	345 - 370	310 - 335	165	0,6	6	2,5
76003850	MAC 3850	360 - 385	300 - 325	165	0,6	6	3,0
76004608	MAC 4608	435 - 460	360 - 385	180	0,6	6	2,6
76005150	MAC 5150	490 - 510	385 - 410	165	0,6	6	3,8

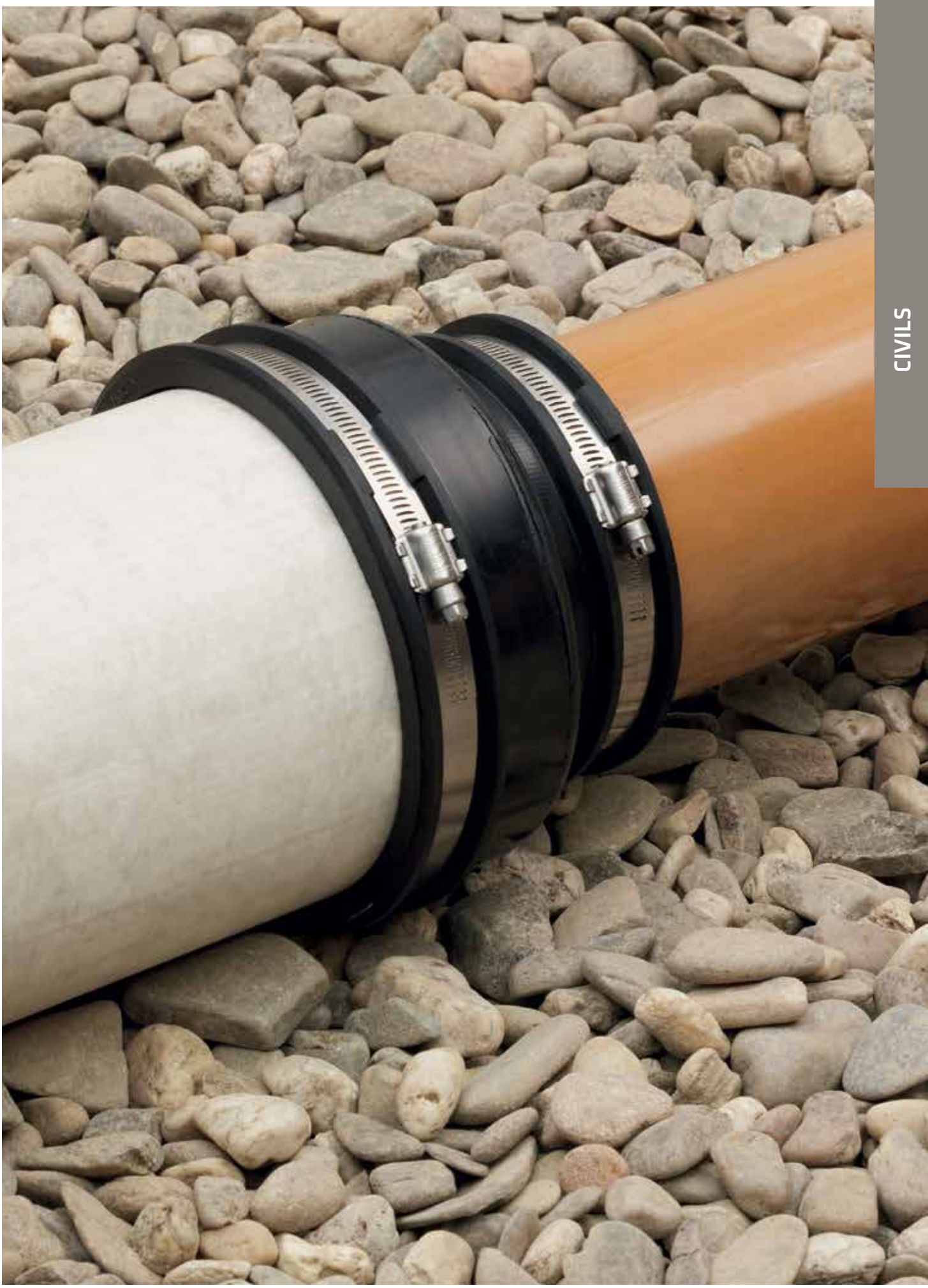

Drain Coupling

MDC DRAIN COUPLING

+ Coupling for same outside diameters
+ For above and below ground
+ Reliable and durable solution
+ Resistant to 0.6 bar

Drain Coupling MDC – for the connection of all pipe systems with same outside diameters
The Drain Coupling MDC connects all plain ended pipes with same outside diameters and materials.

The Drain Coupling MDC can be used for applications above and below ground as well as inside and outside of buildings.

CE 06 BS EN 295-4 | CE 06 BS EN 681 | UK CA | LRQA CERTIFIED ISO 9001

INSTALLATION

Position plain ended pipes.

Slide coupling over one plain end.

Center coupling over joint. Tighten clamps.

DESCRIPTION

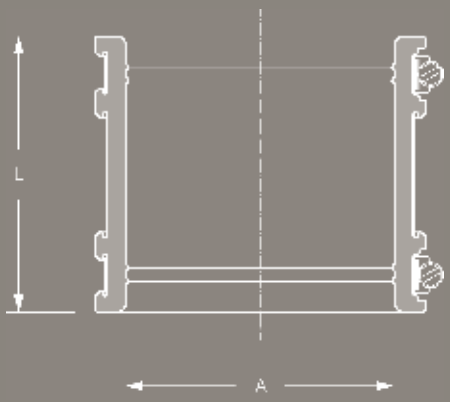

TECHNICAL SPECIFICATION

Drain Coupling MDC for the connection of all plain ended pipe systems with same outside diameters for applications above and below ground as well as inside and outside of buildings.

Pipe 1	DN/Material _____
Pipe 2	DN/Material _____
Article Number	_____
	____ Qty ____ Price/Unit ____ Total
Manufacturer:	MISSION RUBBER (UK) LTD., Sheffield, S35 9TG T +44 (0) 114 257 - 0040
Pressure Tightness:	0.6 bar water / -0.3 bar vacuum
Jetting Resistance:	120 bar
Sealing Material:	EPDM or Nitrile (NBR) rubber with lock in place profile according to BS EN 681-1
Stainless Steel:	AISI 304/1.4301, alternatively AISI 316/1.4404 according to BS EN 10088-2
Temperature Resistance:	-40°C to +120°C, temporary max. temperature +160°C
Standard/Approval:	BS EN 295-4

PRODUCT RANGE

DRAIN COUPLING MDC

Article Number	Reference	A Size Range (mm)	L Length (mm)	resistant to (bar)	Nm	Weight (kg)
76381190	MDC 32	24 - 32	65	0,6	6	0,1
76381195	MDC 40	32 - 40	65	0,6	6	0,1
76381200	MDC 50	42 - 50	65	0,6	6	0,1
76381205	MDC 56	50 - 56	70	0,6	6	0,1
76381947	MDC 65	55 - 65	90	0,6	6	0,2
76381952	MDC 75	65 - 75	90	0,6	6	0,3
76303021	MDC 89	75 - 89	100	0,6	6	0,4
76381970	MDC 95	85 - 95	100	0,6	6	0,4
76381955	MDC 100	85 - 100	100	0,6	6	0,4
76481958	MDC 115	100 - 115	120	0,6	6	0,4
76481125	MDC 125	110 - 125	110	0,6	6	0,4
76481960	MDC 137	120 - 137	120	0,6	6	0,4
76481961	MDC 150	125 - 150	120	0,6	6	0,5
76481962	MDC 162	137 - 162	120	0,6	6	0,5
76125165	MDC 165	150 - 165	110	0,6	6	0,5
76481964	MDC 175	150 - 175	120	0,6	6	0,6
76481970	MDC 185	165 - 185	120	0,6	6	0,6
76481966	MDC 190	165 - 190	150	0,6	6	0,6
76481978	MDC 200	175 - 200	150	0,6	6	0,6
76481980	MDC 212	187 - 212	150	0,6	6	0,6
76481982	MDC 225	200 - 225	150	0,6	6	0,7
76481983	MDC 250	225 - 250	150	0,6	6	0,7
76481984	MDC 275	250 - 275	150	0,6	6	0,8
76481290	MDC 290	265 - 290	150	0,6	6	0,9
76481320	MDC 320	290 - 320	150	0,6	6	0,9

Lager sizes available in the MSC and MLC range.

ROLL-RING MRR

+ Connection to sockets without seal
+ Socket connection remains
+ Reliable and durable solution
+ Resistant to 0.5 bar

Roll-Ring – for the connection of spigots from all pipe materials to sockets without seal
The Roll-Ring connects spigots from all materials to sockets without seal (e.g. clay or concrete).

By using the Roll-Ring there is no need for cutting off the socket and connecting with a flexible coupling.

The Roll-Ring is individually produced to the customer´s requirements, to provide the right compression for effective sealing.

CE 06 BS EN 681

LRQA CERTIFIED ISO 9001

INSTALLATION

Do not use lubricant.

Position Roll-Ring in front of socket.

Push spigot into socket.

DESCRIPTION

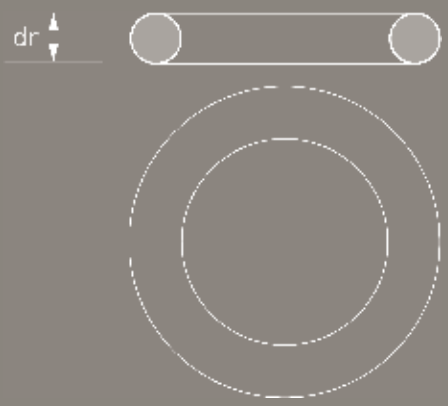

TECHNICAL SPECIFICATION

Roll-Ring for the connection of spigots from all pipe materials to sockets without seal.

Pipe 1	DN/Material	_____
	Socket Internal Ø (mm)	_____
Pipe 2	DN/Material	_____
	External Ø (mm)	_____
Article Number	_____	
	____ Qty ____ Price/Unit ____ Total	

Manufacturer:	MISSION RUBBER (UK) LTD., Sheffield, S35 9TG T +44 (0) 114 257 - 0040
Pressure Tightness:	0.5 bar water / -0.3 bar vacuum
Sealing Material:	SBR rubber according to BS EN 681-1
Temperature Resistance:	-40°C to +80°, temporary max. temperature +130°C
Standard/Approval:	BS EN 681-1

PRODUCT RANGE

ROLL-RING MRR

Article Number	Reference	DN	Internal-Socket Ø (mm)	Outside-Ø (mm)	Pipe Material Spigot	dr String Strength (mm)	resistant to (bar)	Weight (kg)
3010016	Rollring MRR Clay DN 100 16 mm	100	150-160	131	Clay	16	0,5	0,1
3010018	Rollring MRR Clay DN 100 18 mm	100	151-161	131	Clay	18	0,5	0,1
3010020	Rollring MRR Clay DN 100 20 mm	100	152-162	131	Clay	20	0,5	0,1
3010022	Rollring MRR Clay DN 100 22 mm	100	153-163	131	Clay	22	0,5	0,1
5010032	Rollring MRR SML/PVC DN 100 32 mm	100	156-162	110	SML/PVC	32	0,5	0,3
3012518	Rollring MRR Clay DN 125 18 mm	125	178-190	159	Clay	18	0,5	0,1
3012520	Rollring MRR Clay DN 125 20 mm	125	179-191	159	Clay	20	0,5	0,1
3012522	Rollring MRR Clay DN 125 22 mm	125	180-192	159	Clay	22	0,5	0,1
3012524	Rollring MRR Clay DN 125 24 mm	125	181-193	159	Clay	24	0,5	0,2
5012534	Rollring MRR SML DN 125 34 mm	125	184-190	135	SML	34	0,5	0,3
5012543	Rollring MRR PVC DN 125 43 mm	125	184-190	125	PVC	43	0,5	0,5
3015020	Rollring MRR Clay DN 150 20 mm	150	207-219	186	Clay	20	0,5	0,1
3015022	Rollring MRR Clay DN 150 22 mm	150	208-220	186	Clay	22	0,5	0,2
3015024	Rollring MRR Clay DN 150 24 mm	150	209-221	186	Clay	24	0,5	0,2
3015026	Rollring MRR Clay DN 150 26 mm	150	210-222	186	Clay	26	0,5	0,3
5015034	Rollring MRR FC DN 150 34 mm	150	214-222	176	Fibre Cement	34	0,5	0,4
5015040	Rollring MRR SML/PVC DN 150 40 mm	150	215-223	160	SML/PVC	40	0,5	0,5
3020022	Rollring MRR Clay DN 200 22 mm	200	265-279	242	Clay	22	0,5	0,2
3020024	Rollring MRR Clay DN 200 24 mm	200	266-280	242	Clay	24	0,5	0,3
3020026	Rollring MRR Clay DN 200 26 mm	200	267-281	242	Clay	26	0,5	0,3
5020046	Rollring MRR SML DN 200 46 mm	200	275-283	210	SML	46	0,5	1,1
5020051	Rollring MRR PVC DN 200 51 mm	200	274-282	200	PVC	51	0,5	1,1
3025026	Rollring MRR Clay DN 250 26 mm	250	324-334	299	Clay	26	0,5	0,4
3025028	Rollring MRR Clay DN 250 28 mm	250	325-335	299	Clay	28	0,5	0,4
3030028	Rollring MRR Clay DN 300 28 mm	300	380-390	355	Clay	28	0,5	0,5
3030030	Rollring MRR Clay DN 300 30 mm	300	381-391	355	Clay	30	0,5	0,6
3030032	Rollring MRR Clay DN 300 32 mm	300	382-392	355	Clay	32	0,5	0,6

Roll Ring can also be used in between the ridges of ribbed pipes. This includes Twinwall, Structural and Ultra Rib Pipe.

Wedge-Shaped Seal

MKG CONCRETE SEAL

+ Seal for concrete manholes
+ Fixed seal
+ Caoutchouc elastomer according to DIN EN 681-1
+ Resistant to 0.5 bar

Wedge-Shaped Seal MKG – for the connection of manhole rings according to DIN 4034
The Wedge-Shaped Seal MKG is used for sealing concrete manholes. The seal is made from a caoutchouc elastomer with a dense structure. It is positioned on the spigot of the manhole shaft and is compressed between the manhole rings.

CE 06 BS EN 681

LRQA CERTIFIED ISO 9001

INSTALLATION

Slide MKG seal over spigot.

Apply lubricant to MKG seal.

Push manhole rings together.

DESCRIPTION

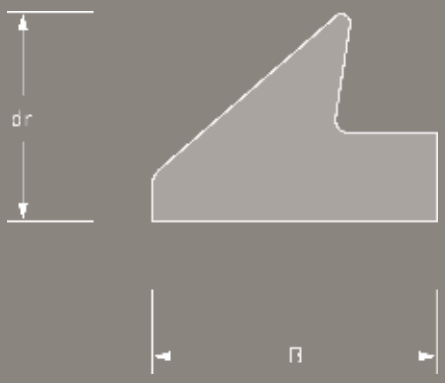

TECHNICAL SPECIFICATION

Wedge-Shaped Seal MKG for concrete manholes according to DIN 4034. The connection requires testing according to DIN EN 1610.

DN _____

Article Number _____

____ Qty ____ Price/Unit ____ Total

Manufacturer:	MISSION RUBBER (UK) LTD., Sheffield, S35 9TG T +44 (0) 114 257 - 0040
Pressure Tightness:	0.5 bar water
Sealing Material:	SBR rubber according to BS EN 681-1
Temperature Resistance:	-40°C to +80°C, temporary max. temperature +130°C
Standard/Approval:	BS 4060, BS 4034, BS EN 1917

PRODUCT RANGE

WEDGE-SHAPED SEAL MKG FOR MANHOLES

Article Number	Reference	dr Hight of Profile (mm)	Socket Gap min. (mm)	Socket Gap max. (mm)	resistant to (bar)	Weight (kg)
35303058	MKG DN 1000, 18 mm	18	8,4	12,6	0,5	0,9
35303060	MKG DN 1000, 20 mm	20	9,3	14,0	0,5	1,3
35360061	MKG DN 1200, 21 mm	21	9,8	14,7	0,5	1,8
35450065	MKG DN 1500, 25 mm	25	11,7	17,5	0,5	3,0

WEDGE-SHAPED SEAL MKG 30

dr Hight of Profile (mm)	B Contact Surface (mm)	Socket Gap min. (mm)	Socket Gap max. (mm)
12	22	5,6	8,4
14	26	6,5	9,8
16	30	7,5	11,2
18	33	8,4	12,6
20	37	9,3	14,0
22	41	10,3	15,4
24	44	11,2	16,8
26	48	12,1	18,2
28	52	13,1	19,6
30	55	14,0	21,0
32	59	19,9	22,4

WEDGE-SHAPED SEAL MKG 40

dr Hight of Profile (mm)	B Contact Surface (mm)	Socket Gap min. (mm)	Socket Gap max. (mm)
12	20	5,6	8,4
14	24	6,5	9,8
16	27	7,5	11,2
18	30	8,4	12,6
19	31	8,9	13,3
20	32	9,3	14,0
21	36	9,8	14,7
22	38	10,3	15,4
24	42	11,2	16,8
25	44	11,7	17,5
26	45	12,1	18,2
27	46	12,6	18,9
28	52	13,1	19,6
30	52	14,0	21,0
32	56	19,9	22,4

Jointing Element

BKL CLAY TO CONCRETE SEAL

+ Joint integrated in concrete manholes
+ Polystyrene supporting element
+ Joint system F
+ Resistant to 0.5 bar

BKL Jointing Element – for the connection of clay pipes to concrete manholes and road gullies
The BKL Jointing Element is integrated into concrete manholes or road gullies (socket L, joint system F) when manufactured.

To get the necessary space for installation, the BKL Jointing Element is installed together with a polystyrene supporting element.

INSTALLATION

Remove polystyrene from socket.

Apply lubricant to BKL joint.

Push pipe into socket.

DESCRIPTION

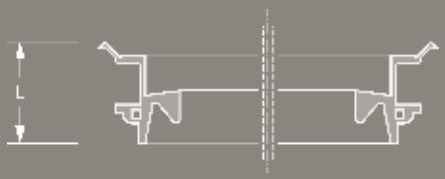

TECHNICAL SPECIFICATION

BKL Jointing Element including polystyrene supporting element according to DIN EN 295-4 for the connection of clay pipes (joint system F) to concrete manholes or road gullies according to DIN 4034 and DIN EN 1917.

DN _____

Article Number _____
____ Qty ____ Price/Unit ____ Total

Manufactuer:	MISSION RUBBER (UK) LTD., Sheffield, S35 9TG T +44 (0) 114 257 - 0040
Pressure Tightness:	0.5 bar water
Sealing Material:	EPDM rubber according to BS EN 681-1
Temperature Resistance:	-40°C to +120°C, temporary max. temperature +160°C
Standard/Approval:	BS EN 295-4

PRODUCT RANGE

BKL JOINITNG ELEMENT				
Article Number	Reference	L Length (mm)	resistant to (bar)	Weight (kg)
36065150	BKL DN 150 incl. supporting element type 1	38	0,5	0,2
36065151	BKL DN 150 incl. supporting element type 2	38	0,5	0,2
36065200	BKL DN 200 incl. supporting element	38	0,5	0,3

LATERAL CONNECTIONS

Sewer Saddle

TWISTEE®

+ Connects to concrete and clay main sewer pipes
+ Various lateral pipe materials can be connected
+ Resistant to shear and vertical loads resulting from differential settlement
+ Resistant to 0.6 bar hydrostatic pressure
+ WRC and Anglian Water Approved

Sewer Saddle TWISTEE® - for connecting lateral pipes to main sewers made of clay or concrete
As the Sewer Saddle TWISTEE® has been designed with a spigot, it offers the possibility to connect to any lateral pipe material.

wrc approved PT/413/0118 | CE 06 BS EN 681 | love every drop

INSTALLATION

Drill a clean hole using a core drill (drill stand is recommended). For reinforced concrete pipes apply corrosion protection liquid on the inside wall of the hole.

Insert TWISTEE gasket considering flow direction and apply the lubricant on the thread.

Screw the TWISTEE spigot into the gasket using the installation wrench.

DESCRIPTION

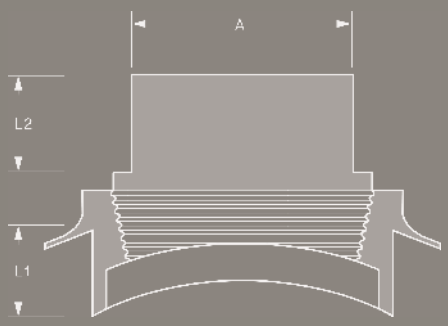

TECHNICAL SPECIFICATION

Sewer Saddle TWISTEE for connecting lateral pipes to thick walled main sewers.

Main Sewer DN/Material _____
Lateral Pipe DN/Material _____

Article Number _____
___ Oty ___ Price/Unit ___ Total

Manufacturer:	MISSION RUBBER (UK) LTD., Sheffield, S35 9TG T +44 (0) 114 257 - 0040
Pressure Tightness:	0.6 bar water / -0.3 bar vacuum
Jetting Resistance:	170 bar
Sealing Material:	EPDM rubber according to BS EN 681-1
Plastic Body:	PP according to BS EN 14758-1
Temperature Resistance:	-40°C to +120°C, temporary max. temperature +160°C
Standard/Approval:	DIBt-Approval (Z-42.1-567), BS EN 681-1

PRODUCT RANGE

SEWER-SADDLE TWISTEE® DN 150 FOR CLAY / CONCRETE SEWERS FROM DN 300								
	Reference	A Outside-Ø (mm)	Wall Thickness Main Sewer (mm)	Core Drill (mm)	L1 Length (mm)	L2 Length (mm)	resistant to (bar)	Weight (kg)
TW150 PVC	TWISTEE® for PVCu DN 160 (with coupling)	160	32	186 +/- 1,0	50	70	0,6	1,5
TW150 C	TWISTEE® for Clay DN 150 (with adaptor)	170-192	32	186 +/- 1,0	50	70	0,6	1,5
TW150 TW	TWISTEE® for Twin Wall DN 150 (with coupling)	170-192	32	186 +/- 1,0	50	70	0,6	1,7
TW150 UR	TWISTEE® Twin Wall Plastic/GRP DN 150 with coupling	160-175	32	186 +/- 1,0	50	70	0,6	1,5
TW150	TWISTEE® DN 150	150	32	186 +/- 1,0	50	70	0,6	0,9
TWBOA	TWISTEE® Boa	-	-	-	-	-	-	0,2
TW186CD	186 mm Core Drill complete with adaptor	-	-	-	-	-	-	3,0

SEWER-SADDLE TWISTEE® DN 100 FOR CLAY / CONCRETE SEWERS FROM DN 200								
Article Number	Reference	A Outside-Ø (mm)	Wall Thickness Main Sewer (mm)	Core Drill (mm)	L1 Length (mm)	L2 Length (mm)	resistant to (bar)	Weight (kg)
28202140	TWISTEE® for PVCu DN 110 (with coupling)	100-115	20	134 +/- 1,0	50	45	0,6	0,7
28202141	TWISTEE® for Clay DN 100 (with adaptor)	121-137	20	134 +/- 1,0	50	45	0,6	0,9
28202142	TWISTEE® for Twin Wall DN 100 (with coupling)	107-122	20	134 +/- 1,0	50	45	0,6	0,7
28202144	TWISTEE® DN 100	100	20	134 +/- 1,0	50	45	0,6	0,4
28600001	TWISTEE® Boa	-	-	-	-	-	-	0,2
28600003	134 mm Core Drill complete with adaptor	-	-	-	-	-	-	3,0

CONNECTING OPTIONS

TWISTEE® Plastic with coupling

Push the plastic coupling on to the TWISTEE® spigot and then connect the plastic pipe.

TWISTEE® Clay with adaptor

Place adaptor on to the TWISTEE® spigot and tighten the first clamp. Insert the clay pipe and tighten the second clamp.

TWISTEE® Twin Wall Plastic/ GRP with coupling

Place coupling on to TWISTEE® spigot and tighten the first clamp. Place rubber ring in the second groove of the Twin Wall Plastic pipe. Then connect the pipe and tighten the second clamp.

LATERAL CONNECTIONS

Sewer Saddle

TWISTEE®

+ Connects to concrete and clay main sewer pipes
+ Design to push directly with PVC Pipe
+ Resistant to shear and vertical loads resulting from differential settlement
+ Resistant to 0.6 bar hydrostatic pressure
+ WRC and Anglian Water Approved

Sewer Saddle TWISTEE® - for connecting lateral pipes to main sewers made of clay or concrete
As the Sewer Saddle TWISTEE® has been designed with a socket, it offers the possibility to connect to any lateral pipe material.

wrc approved PT/413/0118 | CE 06 BS EN 681 | love every drop

INSTALLATION

Drill a clean hole using a core drill. For reinforced concrete pipes apply corrosion protection liquid on the inside wall of the hole.

Insert TWISTEE gasket considering flow direction and apply the lubricant on the thread.

Screw the TWISTEE spigot into the gasket using the installation wrench.

DESCRIPTION

TECHNICAL SPECIFICATION

Sewer Saddle TWISTEE for connecting lateral pipes to thick walled main sewers.

Main Sewer	DN/Material	_____
Lateral Pipe	DN/Material	_____
Article Number	_____	

___ Oty ___ Price/Unit ___ Total

Manufacturer:	MISSION RUBBER (UK) LTD., Sheffield, S35 9TG T +44 (0) 114 257 - 0040
Pressure Tightness:	0.6 bar water / -0.3 bar vacuum
Jetting Resistance:	170 bar
Sealing Material:	EPDM rubber according to BS EN 681-1
Plastic Body:	PP according to BS EN 14758-1
Temperature Resistance:	-40°C to +120°C, temporary max. temperature +160°C
Standard/Approval:	DIBt-Approval (Z-42.1-567), BS EN 681-1

PRODUCT RANGE

SEWER-SADDLE TWISTEE® DN 150 FOR CLAY / CONCRETE SEWERS FROM DN 300								
	Reference	A Outside-Ø (mm)	Wall Thickness Main Sewer (mm)	Core Drill (mm)	L1 Length (mm)	L2 Length (mm)	resistant to (bar)	Weight (kg)
28202160	TWISTEE® for PVCu DN 160 (with coupling)	160	32	186 +/- 1,0	50	70	0,6	1,5
28600001	TWISTEE® Boa	-	-	-	-	-	-	0,2
28600002	186 mm Core Drill complete with adaptor	-	-	-	-	-	-	3,0

LATERAL CONNECTIONS

Sewer Saddle

T-FLEX

+ For main sewers with smooth surface
+ For all sewer materials
+ Sealing against the outer sewer wall
+ Resistant to 0.5 bar

Sewer Saddle T-Flex – for connecting lateral pipes to existing sewers or drains
The seal of the Sewer Saddle T-Flex is formed by compression of the rubber apron against the outer sewer wall and connects laterals to existing sewers or drains with a smooth surface.

The size range of the Sewer Saddle T-Flex is designed to fit plain ended plastic pipes.

The tolerances of the Sewer Saddle T-Flex allow the use of standard core drills.

CE 06 BS EN 681

LRQA CERTIFIED ISO 9001

INSTALLATION

Drill and clean hole 90° to pipe axis.

Position T-Flex centrally over cored hole and tighten clamps around the main sewer.

Push lateral pipe into saddle and tighten clamp.

DESCRIPTION

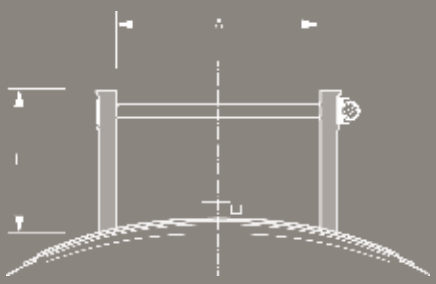

TECHNICAL SPECIFICATION

Sewer Saddle T-Flex for connecting lateral pipes to existing sewers or drains with a smooth surface.

Main Sewer	DN/Material _____
Lateral Pipe	DN/Material _____
Article Number	_____
	____ Qty ____ Price/Unit ____ Total

Manufacturer:	MISSION RUBBER (UK) LTD., Sheffield, S35 9TG T +44 (0) 114 257 - 0040
Pressure Tightness:	0.5 bar water
Sealing Material:	EPDM rubber according to BS EN 681-1
Stainless Steel:	AISI 304/1.4301 according to BS EN 10088-2
Temperature Resistance:	-40°C to +120°C, temporary max. temperature +160°C
Standard/Approval:	BS EN 681-1, MPA Test Certificate No. 22 00003601-02-1

PRODUCT RANGE

SEWER SADDLE T-FLEX								
Article Number	Reference	A Size Range (mm)	Outside Ø Main Sewer (mm)	Core Drill (mm)	L Length (mm)	resistant to (bar)	Nm	Weight (kg)
28104629	T-FLEX DN 100, Core Drill 117-127 mm	105-120	200-400	117-127	88	0,5	6	1,0
28105125	T-FLEX DN 125, Core Drill 126-142 mm	115-130	200-400	126-142	88	0,5	6	1,2
28106634	T-FLEX DN 150, Core Drill 167-177 mm	150-170	250-500	167-177	97	0,5	6	2,0
28108630	T-FLEX DN 200, Core Drill 203-217 mm	175-200	300-500	203-217	100	0,5	10	3,1

LATERAL CONNECTIONS

Lateral Connector

LTC

+ Connecting PP/PVC to Twin Wall or Ultra-Rib
+ Universal connector for many sewers
+ Reliable and durable solution
+ Resistant to 0.5 bar

Lateral Connector LTC – for connecting lateral plastic pipes to existing structured walled main sewers
The Lateral Connector LTC connects smooth walled plastic pipes to existing structured walled sewers like Twin Wall or Ultra-Rib and offers an economical and easy to install solution on site.

The Lateral Connector LTC can be generally used for various structured walled sewers, depending on the wall thickness (see application advices).

CE 06 BS EN 681

LRQA CERTIFIED ISO 9001

INSTALLATION

Drill and clean hole 90° to pipe axis.

Insert LTC into main sewer.

Push lateral pipe into LTC and tighten clamp.

DESCRIPTION

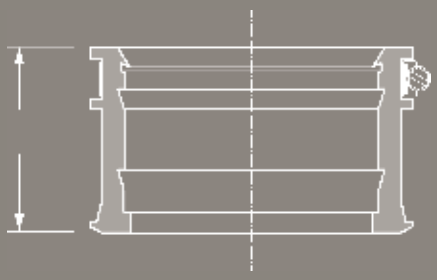

TECHNICAL SPECIFICATION

Lateral Connector LTC for connecting lateral plastic pipes to existing structured walled main sewers.

Main Sewer	DN/Material	_____
Lateral Pipe	DN	_____
Article Number	_____	
	____ Qty ____ Price/Unit ____ Total	

Manufacturer:	MISSION RUBBER (UK) LTD., Sheffield, S35 9TG T +44 (0) 114 257 - 0040
Pressure Tightness:	0.5 bar water
Sealing Material:	EPDM rubber according to BS EN 681-1
Stainless Steel:	AISI 304/1.4301, alternatively AISI 316/1.4404 according to BS EN 10088-2
Temperature Resistance:	-40°C to +120°C, temporary max. temperature +160°C
Standard/Approval:	BS EN 681-1, MPA Test Certificate No. 22 0004535

PRODUCT RANGE

LATERAL CONNECTOR LTC FOR STRUCTURED WALLED MAIN SEWERS								
Article Number	Reference	Outside Ø Lateral Pipe (mm)	DN Main Sewer (mm)	Core Drill (mm)	L Length (mm)	resistant to (bar)	Nm	Weight (kg)
32600110	LTC DN 100, Core Drill 127 mm	110	from DN 300	127	90	0,5	6	0,5
32600160	LTC DN 150, Core Drill 177 mm	160	from DN 300	177	90	0,5	6	0,7
32600200	LTC DN 200, Core Drill 217 mm	200	from DN 350	217	125	0,5	6	1,2
32600250	LTC DN 250, Core Drill 267 mm	250	from DN 500	267	125	0,5	6	1,6

Application advices:

- Lateral Connectors LTC DN 100, DN 125 and DN 150 can be used if the wall thickness of the main sewer is not larger than 55 mm.

- Lateral Connector LTC DN 200 and DN 250 can be used if the wall thickness of the main sewer is not larger than 90 mm.

MPVCA ADAPTOR

MPVCA are used in conjunction with LTC and T- Flex lateral connections when the connecting pipe is different to PVC.

MPVCA ADAPTOR					
Reference	Size Range	Length (mm)	resistant to (bar)	Nm	Weight (kg)
MPVCA 122 (4'')	110 - 122	240	0,5	6	0,9
MPVCA 400 (4'')	121 - 137	240	0,5	6	0,9
MPVCA 175 (6'')	160 - 175	250	0,5	6	1,4
MPVCA 924 (6'')	170 - 192	250	0,5	6	1,5
MPVCA 600* (6'')	160 - 180	270	0,5	6	2,15
MPVCA 991* (6'')	105 - 115	270	0,5	6	2

* Only suitable with the LTC 200.

CORE DRILL

for core drills for twin-walled plastic pipes. Core drills come complete with holesaw, arbor and pilot drill.

CORE DRILL				
Article Number	Reference	Core Drill (mm)	L Length (mm)	Weight (kg)
32601110	Core Drill 127 mm	127	110	1,5
32601160	Core Drill 177 mm	177	110	2,1
32601200	Core Drill 217 mm	217	110	2,8
32601250	Core Drill 267 mm	267	110	3,45

These core drills are also recommended with the T-FLEX.

LATERAL CONNECTIONS

Lateral Connector

RRD M40

+ Connecting thin walled laterals to concrete sewers
+ Reliable and durable solution
+ EPDM rubber profile
+ Resistant to 0.5 bar

Lateral Connector M40 – for connecting thin walled lateral pipes to concrete main sewers (minimum wall thickness 45 mm)
The Lateral Connector M40 connects thin walled pipes (e.g. plastic, cast iron, etc.) to concrete main sewers with a minimum wall thickness of 45 mm.

CE 06 BS EN 681

LRQA CERTIFIED ISO 9001

INSTALLATION

Drill and clean hole 90° to pipe axis.

Insert M40 into main sewer.

Apply lubricant to lateral plain end and push lateral into M40.

DESCRIPTION

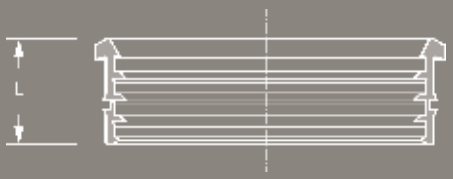

TECHNICAL SPECIFICATION

Lateral Connector M40 for connecting thin walled lateral pipes to existing concrete main sewers with a minimum wall thickness of 45 mm.

Main Sewer	DN/Material	_____
Lateral Pipe	DN	_____
Article Number	_____	
	____ Qty ____ Price/Unit ____ Total	

Manufacturer:	MISSION RUBBER (UK) LTD., Sheffield, S35 9TG T +44 (0) 114 257 - 0040
Pressure Tightness:	0.5 bar water
Jetting Resistance:	120 bar
Sealing Material:	EPDM rubber according to BS EN 681-1
Temperature Resistance:	-40°C to +120°C, temporary max. temperature +160°C
Standard/Approval:	BS EN 681-1, MPA Test Certificate No. 22 1743097-02

PRODUCT RANGE

LATERAL CONNECTOR RRD M40							
Article Number	Reference	Outside Ø Lateral Pipe (mm)	Min. Wall Thickness Main Sewer (mm)	Core Drill (mm)	L Length (mm)	resistant to (bar)	Weight (kg)
32200100	M40 / 110	110	45	122	48	0,5	0,1
32200125	M40 / 125	125	45	137	48	0,5	0,2
32200150	M40 / 160	160	45	172	48	0,5	0,2
32200200	M40 / 200	200	45	212	48	0,5	0,3
32200250	M40 / 250	250	45	262	48	0,5	0,3
32200300	M40 / 315	315	45	327	48	0,5	0,3
32200400	M40 / 400	400	45	412	48	0,5	0,4
32100100	M40 / 110	110	45	122	48	0,5	0,1
32100125	M40 / 135	135	45	147	48	0,5	0,2
32100150	M40 / 160	160	45	172	48	0,5	0,2
32400100	M40 / 118	118	45	130	48	0,5	0,2
32400150	M40 / 170	170	45	182	48	0,5	0,2

LATERAL CONNECTIONS

Lateral Connector

RRD M140

+ Connecting thin walled laterals to concrete sewers
+ Reliable and durable solution
+ Adaptable to pipe wall thickness
+ Resistant to 0.5 bar

Lateral Connector M140 – for connecting thin walled lateral pipes to concrete main sewers
The Lateral Connector M140 connects thin walled pipes (e.g. plastic, cast iron, etc.) to concrete main sewers.

The design of the Lateral Connector M140 allows cutting the connector to the length of the main sewer wall thickness.

CE 06 BS EN 681

LRQA CERTIFIED ISO 9001

INSTALLATION

Drill and clean hole 90° to pipe axis.

Cut M140 to length of wall thickness and insert M140 into main sewer.

Apply lubricant to lateral plain end and push lateral into M140.

DESCRIPTION

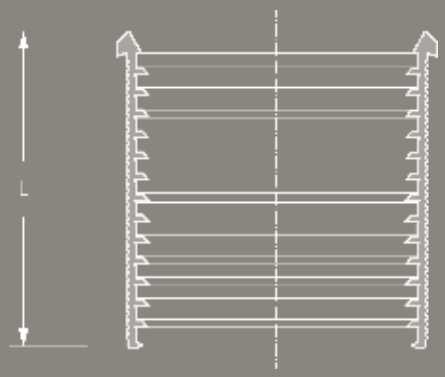

TECHNICAL SPECIFICATION

Lateral Connector M140 for connecting thin walled lateral pipes to existing concrete main sewers, covering a wall thickness of maximum 140 mm.

Main Sewer	DN/Material	_____
Lateral Pipe	DN/Material	_____
Article Number	_____	
	____ Qty ____ Price/Unit ____ Total	

Manufacturer:	MISSION RUBBER (UK) LTD., Sheffield, S35 9TG T +44 (0) 114 257 - 0040
Pressure Tightness:	0.5 bar water
Jetting Resistance:	120 bar
Sealing Material:	EPDM rubber according to BS EN 681-1
Temperature Resistance:	-40°C to +120°C, temporary max. temperature +160°C
Standard/Approval:	BS EN 681-1

PRODUCT RANGE

LATERAL CONNECTOR M140						
Article Number	Reference	Outside Ø Lateral Pipe (mm)	Core Drill (mm)	L Length (mm)	resistant to (bar)	Weight (kg)
32240100	M140 / 110	110	122	155	0,5	0,4
32240125	M140 / 125	125	137	155	0,5	0,4
32240150	M140 / 160	160	172	155	0,5	0,6
32240200	M140 / 200	200	212	155	0,5	0,7
32240250	M140 / 250	250	262	155	0,5	0,9
32240300	M140 / 315	315	327	155	0,5	1,0
32240400	M140 / 400	400	412	155	0,5	1,1
32140100	M140 / 110	110	122	155	0,5	0,4
32140125	M140 / 135	135	147	155	0,5	0,5
32140150	M140 / 160	160	172	155	0,5	0,6
32440100	M140 / 118	118	130	155	0,5	0,4
32440150	M140 / 170	170	182	155	0,5	0,6

END CAP MEC

+ Sealing of pipe ends
+ For use inside and outside of buildings
+ Clamps in stainless steel
+ Resistant to 0.6 bar

End Cap – for the long and short term sealing of pipe ends
The End Cap is used for the long and short term sealing of pipe ends to prevent ingress of dirt or water.

The End Cap can be used inside and outside of building.

CE 06 BS EN 681

LRQA CERTIFIED ISO 9001

INSTALLATION

Slide End Cap over pipe end.

Tighten clamps.

DESCRIPTION

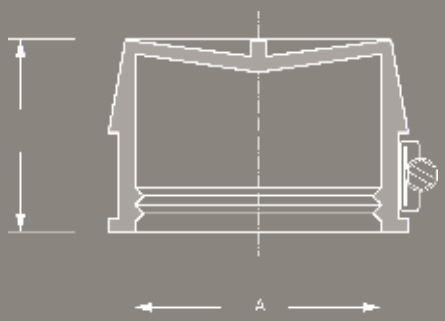

TECHNICAL SPECIFICATION

End Cap for the long and short term sealing of pipe ends.

Pipe	DN/Material _____
Article Number	_____
	____ Qty ____ Price/Unit ____ Total
Manufacturer:	MISSION RUBBER (UK) LTD., Sheffield, S35 9TG T +44 (0) 114 257 - 0040
Pressure Tightness:	0.6 bar water
Sealing Material:	EPDM rubber according to BS EN 681-1
Stainless Steel:	AISI 304/1.4301, alternatively AISI 316/1.4404 according to BS EN 10088-2
Temperature Resistance:	-40°C to +120°C, temporary max. temperature +160°C
Standard/Approval:	BS EN 681-1

PRODUCT RANGE

END CAP MEC						
Article Number	Reference	A Size Range (mm)	L Length (mm)	Nm	resistant to (bar)	Weight (kg)
21471011	End Cap MEC 1	42-52	40	6	0,6	0,1
21472019	End Cap MEC 2	56-66	40	6	0,6	0,1
21473017	End Cap MEC 3	80-90	40	6	0,6	0,1
21474015	End Cap MEC 4	105-115	40	6	0,6	0,2
21475020	End Cap MEC 5	130-140	40	6	0,6	0,3
21476028	End Cap MEC 6	155-165	40	6	0,6	0,4
21477123	End Cap MEC 7	170-185	40	6	0,6	0,4
21478016	End Cap MEC 8	205-215	40	6	0,6	0,5
21470017	End Cap MEC 10	245-260	40	6	0,6	0,8
21471101	End Cap MEC 11	275-285	40	6	0,6	0,9
21471218	End Cap MEC 12	310-325	40	6	0,6	1,1

Mission commercial range

COMMERCIAL NON RETURN VALVE

+ Resistant to 1 bar (10 m head) back pressure
+ Low weight for ease of installation yet with high mechanical strength
+ Resistant to all normal sewage effluents operating at normal temperatures (below 80° C) and not containing harmful industrial effluents.
+ Seals at a low level of back pressure
+ Easily connected to any type of pipe material by means of couplings (not included)
+ Low maintenance

A range of GRP one-way flap valves designed for installation inside a pipe network using Mission Rubber Standard Couplings and Bushes.

NOTE: Coupling required but dependent on size of pipework

PRODUCT RANGE

MULTI NON-RETURN VALVE							
Reference	DN	A (mm)	B (mm)	C (mm)	D (mm)	E (mm)	Weight (kg)
Multi 250	250	485	455	730	260	60	14
Multi 315	300	578	520	735	324	33	16
Multi 400	400	592	615	897	410	35	26
Multi 500	500	700	710	1245	515	55	43

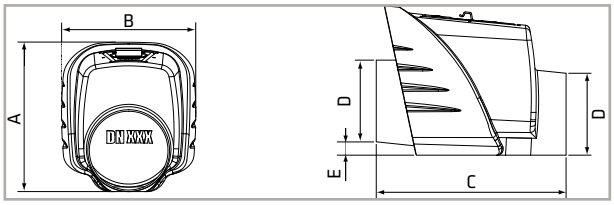

DN 300 to 400

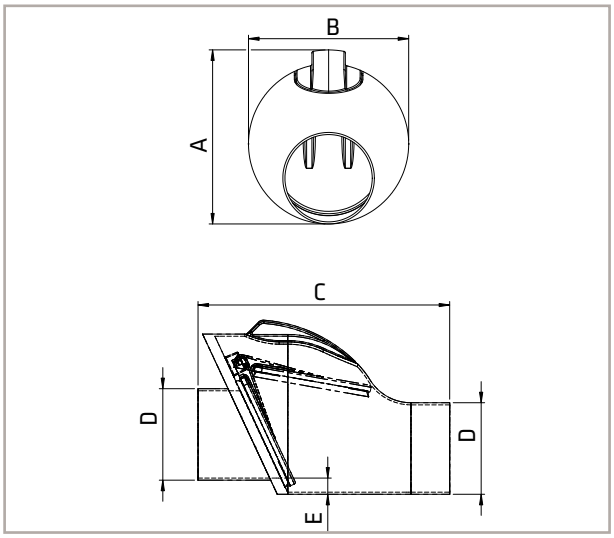

DN 250

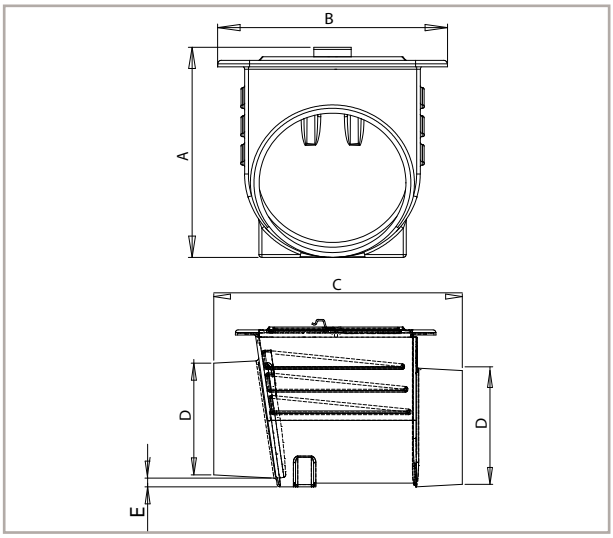

DN 500

Double Flap with locking lever

Single Flap with locking lever

Mission domestic range

DOMESTIC NON RETURN VALVE

+ Recommended for foul
+ Rodent resistant as standard
+ comply with international standards for sewage pipe connections

A range of PVCu non-return valves complying with the requirements of BS EN 13564 - Anti-flooding devices for buildings. Sizes DN 100 to DN200 are certified by the German Institute LGA.

These valves are water tight to a pressure of 0.5 bar (Sm Head).

These valves have a spigot and socketwith integral seal as standard for direct connection to solid walled PVCu pipe. They can be connected to other pipe material using Mission Rubber Flexible Couplings - contact our sales office for more information.

PRODUCT RANGE

DOUBLE FLAP WITH LOCKING LEVER					
Reference	DN	L1 (mm)	L2 (mm)	L (mm)	H (mm)
Single Socket					
12R1648	150	82	83	491	226
12R1148	100	63	65	350	184
Spigot to Spigot					
12M11M8	110	65	65	365	184
12M16M8	160	83	83	468	226

SINGLE FLAP WITH LOCKING LEVER					
Reference	DN	L1 (mm)	L2 (mm)	L (mm)	H (mm)
1555551	100	61	61	307	230
1555651	100R	61	61	307	230
1551691	150	74	74	337	255
1551791	150R	74	74	337	255
1552091	200	86	100	451	300
1552591	250	102	130	520	374
1553091	300	115	165	620	445

R = Stainless Steel Flap

PIPE MOUNTED FLAP VALVE

+ Eliminates need for concrete headwall or pipe flange for fixing e.g. can be connected to the spigot of an outfall pipe passing through gabions
+ No drilling required
+ Fast and easy installation
+ Designed to fit onto any kind of pipe work

A range of flap valves designed for direct connection to any type of drain or sewer pipe using Mission Rubber Standard Couplings and Bushes.

NOTE: Coupling required but dependent on size of pipework

PRODUCT RANGE

MULTI - N

Reference	DN	A (mm)	B (mm)	C (mm)	D (mm)	E (mm)	F (mm)	Weight (kg)
MULTI200N	200	224	216	205	202	11	345	1,2
MULTI250N	250	284	280	218	263	12	399	1,9
MULTI315N	300	335	332	269	318	15	480	3,0
MULTI400N	400	420	417	291	405	16	570	5,5
MULTI500N	500	528	522	316	506	17	678	9,0
MULTI600N	600	659	655	352	638	18	808	13,5

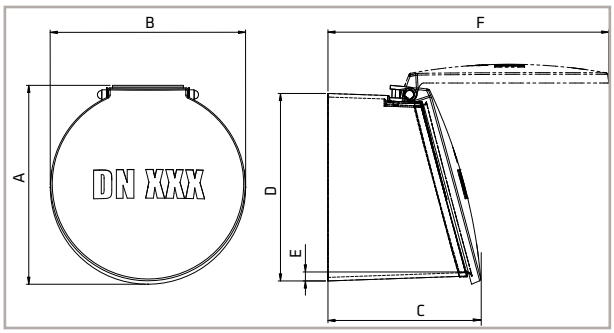

WALL MOUNTED FLAP VALVE

+ Lightweightforfast and easyinstallation
+ Inclined flap for additional security against backflow
+ No need for cement grout when fixing to headwall
+ Hinged design ensures flap closure when no discharge
+ Resista nt to 1 bar (10 m head)

A range of medium diameterflap valves with an inclined flap and PN 10 flange. Integral EPDM rubber sealing rings for sealing to concrete headwall.

PRODUCT RANGE

MULTI - NB								
Reference	DN	A (mm)	B (mm)	C (mm)	D (mm)	E (mm)	F (mm)	Weight (kg)
MULTI200NB	200	343	343	147	180	81	285	1,6
MULTI250NB	250	395	395	161	245	78	339	2,0
MULTI315NB	300	448	448	185	290	80	400	3,7
MULTI400NB	400	570	570	210	375	99	478	6,5
MULTI500NB	500	676	676	240	469	102	589	9,7
MULTI600NB	600	788	788	275	593	93	717	14,3
MULTI700NB	700	1003	935	450	700	120	1030	46,0
MULTI800NB	800	1125	1035	523	800	120	1440	53,0
MULTI1000NB	1000	1330	1264	520	1013	110	1400	80,0
MULTI1200NB	1200	1525	1440	690	1200	130	1620	115,0
MULTI1400NB	1400	1770	1640	800	1400	120	1840	160,0
MULTI1500NB	1500	1860	1740	855	1500	120	1980	180,0

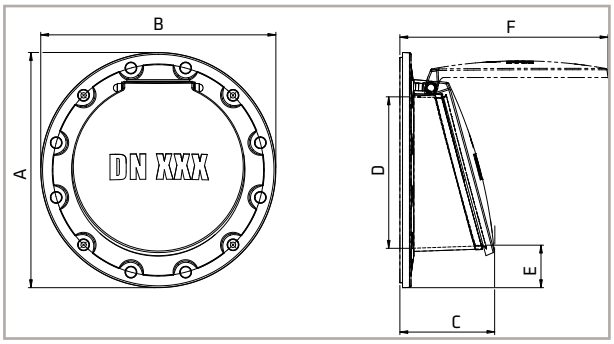

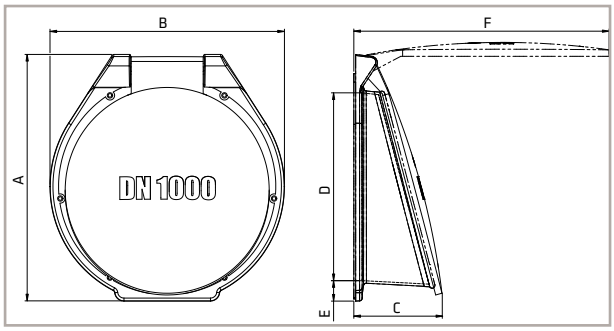

ECO VALVES

+ Very economic flap valve
+ Lightweight for fast and easyinstallation
+ No need for cement grout when fixing to a headwall
+ Resistent to 1 bar (1 Om head)

A range similar to the MULTI - BD range but made from recycled **glass reinforced polyamide.**

ECO-FLAP B

ECO-FLAP-B								
Reference	DN	A (mm)	B (mm)	C (mm)	D (mm)	E (mm)	F (mm)	Weight (kg)
EF100B	100	225	220	45	110	55	188	0.4
EF150B	150	285	285	55	160	63	244	0.6
EF200B	200	342	342	65	200	75	296	0.9

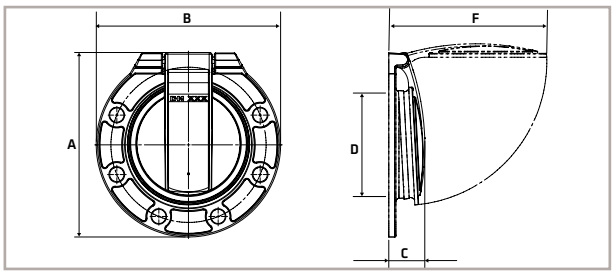

+ Very economic flap valve
+ Socket collar can be removed to connect to anyother pipe material (other than PVCu) when using a Mission Flexible Coupling
+ Lightweight for fast and easyinstallation
+ Resistant to 1 bar (10 m head)

A range of socketed end of line flap valves **to connect directly to PVCu** drainage pipes made from **glass reinforced polyamide.**

ECO-FLAP N

ECO-FLAP-N									
Reference	DN	A (mm)	B (mm)	C (mm)	D (mm)	E (mm)	F (mm)	G (mm)	Weight (kg)
EF100N	100	125	116	149	216	110	141	109	0.3
EF150N	150	178	176	192	299	160	200	169	0.6
EF200N	200	221	220	229	365	200	250	211	1.0

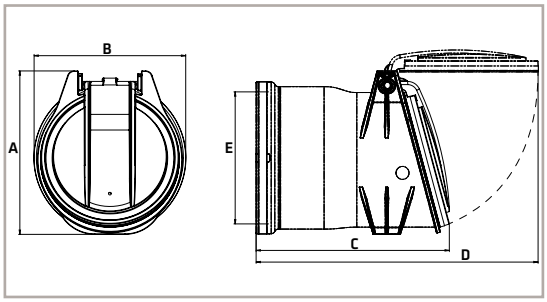

Clamps

CLAMP BANDS

+ Above and underground installations
+ 304 and 316 stainless steel
+ Durable
+ Individual dimension available

Clamps - Our clamps are used in applications for all pipe systems. Durable stainless steel using 304 or 316 grade steel depending on the application or requirement.

Our clamps are available with medium torque, hi torque or our very own patent protected bolt system (size depending) On clamps 100mm Wide a tox process is applied over spot weld.

CE 06 BS EN 681

LRQA CERTIFIED ISO 9001

PRODUCT RANGE

CLAMP BANDS AVAILABLE IN THE FOLLOWING WIGHTS AND MATERIALS

Width (mm)	Clamp	Nm Torque	Size (mm)	Material
18	high torque	20	23 - 620	304 and 316
20	advanced bolting	28	620 and above	304 and 316
50	high torque	20	200 and above	304
100	high torque	20		304 and 316
200	advanced bolting	28		304

LUBRICANT

+ Jointing forces are minimised
+ Compatibility with other sealing materials
+ For plastic, clay and concrete pipes
+ Various package sizes

Lubricant – minimizing the jointing forces for pipe laying
Lubricant is used to minimize the jointing forces when laying pipes such as plastic, clay or concrete.

Lubricant is compatible with other sealing materials.

CE 06

LRQA CERTIFIED ISO 9001

INSTALLATION

Clean socket and spigot.

Apply lubricant to socket and spigot.

Push pipes together.

TECHNICAL SPECIFICATION

Lubricant for minimizing the jointing forces for pipe laying.

Pipe Material _____

Package Size _____

____ Qty ____ Price/Unit ____ Total

Manufacturer:	MISSION RUBBER (UK) LTD., Sheffield, S35 9TG T +44 (0) 114 257 - 0040
Scope of Application:	Plastic Pipes (White), Clay Pipes (Blue), Concrete Pipes (Gray)
Packaging Size:	White 250 g Tube, 500 g Tube, 1 kg Can, 3 kg Pail Blue 1 kg Can, 3 kg Pail Gray 5 kg Pail, 10 kg Pail
Standard/Approval:	Safety Data Sheet (EU) No. 1907/2006

PRODUCT RANGE

LUBRICANT				
Article Number	Reference	Pipe Material	Content Packaging	Weight (kg)
25060006	Lubricant White 75 ml	for plastic pipes	75 ml Tube	0,1
25060004	Lubricant White 250 ml	for plastic pipes	250 ml Tube	0,3
25060005	Lubricant White 500 ml	for plastic pipes	500 ml Tube	0,5
25060011	Lubricant White 1 kg	for plastic pipes	1 kg Can	1,1
25060030	Lubricant White 3 kg	for plastic pipes	3 kg Pail	3,1
25061011	Lubricant Blue 1 kg	for clay pipes	1 kg Can	1,1
25061030	Lubricant Blue 3 kg	for clay pipes	3 kg Pail	3,1
25062050	Lubricant Grey 5 kg	for concrete pipes	5 kg Pail	5,2
25060050	Lubricant White 5 kg	for plastic pipes	5 kg Pail	5,2

INDUSTRIAL

Chemical Coupling

FKM CHEMICAL COUPLING

+ Fluoro-Elastomer FKM
+ Industrial applications
+ Chemical and thermal resistant
+ Resistant to 0.6 bar

FKM chemical coupling – chemical and thermal resistant for industrial applications
The FKM chemical coupling joins plain ended industrial pipe systems with same diameters. It is suitable for above ground and non-pressure applications.

THE FKM-gasket allows a high chemical resistance and a thermal stability of up to +180°C.

The stainless steel shear band covers the entire coupling, therefore protecting the elastomer sleeve.

CE 06 BS EN 681

LRQA CERTIFIED ISO 9001

INSTALLATION

Position plain ended pipes.

Slide sleeve over one plain end and push shear band over.

Tighten clamps reciprocally.

DESCRIPTION

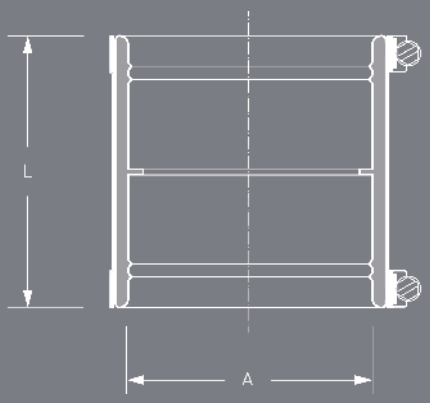

TECHNICAL SPECIFICATION

FKM chemical coupling used in above ground chemical resistant plain ended industrial pipe systems with same diameters.
THE FKM-gasket allows a high chemical resistance and a thermal stability of up to +180°C.

Pipe 1 DN/Material _____
Pipe 2 DN/Material _____

Article Number _____
____ Oty ____ Price/Unit ____ Total

Manufacturer:	MISSION RUBBER (UK) LTD., Sheffield, S35 9TG T +44 (0) 114 257 - 0040
Pressure Tightness:	0.6 bar water / -0.3 bar vacuum
Jetting Resistance:	120 bar
Sealing Material:	FKM Fluororubber according to BS ISO 1629
Stainless Steel:	AISI 304/1.4301 according to BS EN 10088-2
Temperature Resistance:	-20°C to +180°C
Standard/Approval:	BS EN 1629

PRODUCT RANGE

FKM CHEMICAL COUPLING						
Article Number	Reference	A Size Range (mm)	L Length (mm)	resistant to (bar)	Nm	Weight (kg)
90809002	FKM 60	51 - 60	54	0,6	2	0,2
90809003	FKM 90	77 - 90	54	0,6	3	0,2
90809004	FKM 115	102 - 115	54	0,6	3	0,2
90809005	FKM 168	155 - 168	76	0,6	6	0,5

Further sizes are available on request.

Chemical Coupling Multi-Connector

TRANSFER

+ Connector for different materials and dimensions
+ For above ground industrial applications
+ Stainless steel shear band protects the entire sleeve
+ Resistant to 0.6 bar

Multi-Connector TRANSFER – for the connection of plain ended industrial pipe systems from all materials
The Multi-Connector TRANSFER joints plain ended industrial pipe systems with same or different diameters.

The stainless steel shear band covers the entire coupling, hence protecting the elastomer sleeve.

When changing nominal diameters, the flow direction needs consideration.

CE 06 BS EN 681

LRQA CERTIFIED ISO 9001

INSTALLATION

Position plain ended pipes.

Slide sleeve over one plain end and push shear band over.

Tighten clamps reciprocally.

DESCRIPTION

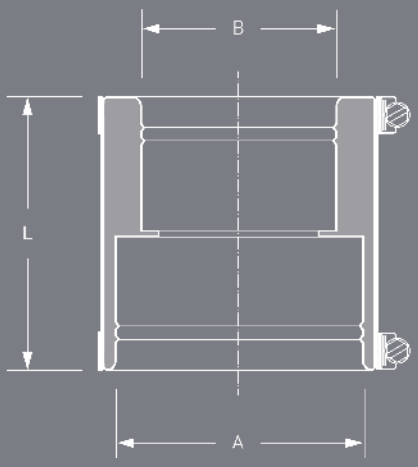

TECHNICAL SPECIFICATION

Multi-Connector TRANSFER for the connection of plain ended industrial pipe systems from different materials with same or different diameters.

Pipe 1 DN/Material _____
Pipe 2 DN/Material _____

Article Number _____
____ Oty ____ Price/Unit ____ Total

Manufacturer:	MISSION RUBBER (UK) LTD., Sheffield, S35 9TG T +44 (0) 114 257 - 0040
Pressure Tightness:	0.6 bar water / -0.3 bar vacuum
Jetting Resistance:	120 bar
Sealing Material:	EPDM rubber according to BS EN 681-1
Stainless Steel:	AISI 304/1.4301 according to BS EN 10088-2
Temperature Resistance:	-40°C to +120°C, temporary max. temperature +160°C
Standard/Approval:	BS EN 1629

PRODUCT RANGE

MULTI-CONNECTOR TRANSFER							
Article Number	Reference	A Size Range (mm)	B Size Range (mm)	L Length (mm)	resistant to (bar)	Nm	Weight (kg)
90801688	TRANSFER CP 150	45-50	45-50	54	0,6	2	0,1
90802637	TRANSFER KC 215	45-50	49-53	54	0,6	2	0,2
90803601	TRANSFER P 430	85-90	110-115	54	0,6	3	0,4
90803569	TRANSFER CP 43	83-90	105-115	54	0,6	3	0,4
90804401	TRANSFER CP 44	105-112	105-115	54	0,6	3	0,2

Further sizes are available on request.

NO HUB COUPLING

+ Connects to cast iron pipes
+ For above and below ground applications
+ Stainless steel shear band protects the entire sleeve
+ Resistant to 0.6 bar

Shielded couplings connect **Cast Iron** hubless soil pipe and fittings in sanitary and drain waste and vent (DWV) applications. For non-pressure, gravity flow applications only. Recommended for **above and underground** installations. **Easy to install and reuse.**

LRQA CERTIFIED ISO 9001

INSTALLATION

Ends of cut pipe must be smooth and square.

Place gasket on no hub cast iron pipe or fitting, firmly seated against the raised stop mark of pipe or fitting. Place stainless steel shield assably over the end of other pipe.

Tighten clamps reciprocally.

TECHNICAL SPECIFICATION

Shielded couplings connect Cast Iron hubless soil pipe and fittings in sanitary and drain waste and vent (DWV) applications.

Pipe 1 DN/Material _____
Pipe 2 DN/Material _____

Article Number _____
____ Oty ____ Price/Unit ____ Total

Manufacturer:	MISSION RUBBER (UK) LTD., Sheffield, S35 9TG T +44 (0) 114 257 - 0040
Pressure Tightness:	0.6 bar water / -0.3 bar vacuum
Jetting Resistance:	120 bar
Sealing Material:	EPDM rubber according to BS EN 681-1
Stainless Steel:	AISI 304/1.4301 according to BS EN 10088-2
Temperature Resistance:	-40°C to +120°C, temporary max. temperature +160°C
Standard/Approval:	BS EN 1629

PRODUCT RANGE

NO HUB COUPLINGS							
Article Number	Reference	A Size Range (mm)	B Size Range (mm)	L Length (mm)	resistant to (bar)	Nm	Weight (kg)
1801018	C150C	48	40	54	0.6	7	10.5
1802016	C200C	60	55	54	0.6	7	11.7
1803014	C300C	85	70	54	0.6	7	15.5
1804012	C400C	114	105	54	0.6	7	18.6
1805019	C500C	135	125	76	0.6	7	21.1
1806017	C600C	160	150	76	0.6	7	23.9

Standard Coupling

MSC TYPE 2B

+ For all pipe materials
+ For above and below ground
+ For usage with bushes
+ Resistant to 2.5 bar

Standard Coupling Type 2B – for the connection of all pipe systems with different or same outside diameters
The Standard Coupling Type 2B connects all plain ended pipes within same or different dimensions and is compensating differences in outside diameters of max. 12 mm. Larger differences will require the use of bushes.

The Standard Coupling Type 2B can be used for applications above and below ground as well as inside and outside of buildings.

CE 06 BS EN 295-4 | CE 06 BS EN 681 | UK CA | LRQA CERTIFIED ISO 9001

INSTALLATION

Position plain ended pipes.

Slide coupling over one plain end.

Center coupling over joint. Tighten clamps and shear band reciprocally.

DESCRIPTION

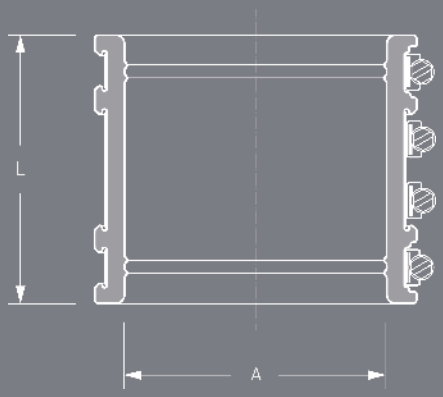

TECHNICAL SPECIFICATION

Standard Coupling Type 2B for connection of all plain ended pipe materials with different or same outside diameters for applications above and below ground as well as inside and outside of buildings. Differences in outside diameters of more than 12 mm will require the use of bushes.

Pipe 1	DN/Material _____
Pipe 2	DN/Material _____
Article Number	_____
	____ Qty ____ Price/Unit ____ Total
Manufacturer:	MISSION RUBBER (UK) LTD., Sheffield, S35 9TG T +44 (0) 114 257 - 0040
Pressure Tightness:	2.5 bar water / -0.3 bar vacuum
Jetting Resistance:	120 bar
Corrosion Resistance:	TOX®-Technology
Sealing Material:	EPDM or Nitrile (NBR) rubber with lock in place profile according to BS EN 681-1
Stainless Steel:	AISI 304/1.4301, alternatively AISI 316/1.4404 according to BS EN 10088-2
Temperature Resistance:	-40°C to +120°C, temporary max. temperature +160°C
Standard/Approval:	BS EN 295-4

PRODUCT RANGE

STANDARD COUPLING MSC, TYPE 2B						
Article Number	Reference	A Size Range (mm)	L Length (mm)	resistant to (bar)	Nm	Weight (kg)
74000050	MSC 50	42-50	90	2,5	6	0,1
74000065	MSC 65	55-65	90	2,5	6	0,3
74000075	MSC 75	65-75	90	2,5	6	0,3
74000089	MSC 89	75-89	100	2,5	6	0,4
74000100	MSC 100	85-100	100	2,5	6	0,5
79000115	MSC 115	100-115	120	2,5	6	0,8
79000120	MSC 120	105-120	120	2,5	6	0,9
79000125	MSC 125	110-125	120	2,5	6	0,9
73100137	MSC 137	120-137	120	2,5	6	0,9
79000150	MSC 150	125-150	120	2,5	6	1,0
73125162	MSC 162	137-162	120	2,5	6	1,1
79000175	MSC 175	150-175	120	2,5	6	1,2
79000185	MSC 185	165-185	120	2,5	6	1,2
79000190	MSC 190	165-190	120	2,5	6	1,6
73150200	MSC 200	175-200	150	2,5	10	1,7
79000212	MSC 212	187-212	150	2,5	10	1,8
79000225	MSC 225	200-225	150	2,5	10	1,9
73200250	MSC 250	225-250	150	2,5	10	2,0
73200275	MSC 275	250-275	150	2,5	10	2,3
79000290	MSC 290	265-290	150	2,5	10	3,4
73250310	MSC 310	285-310	190	2,5	13	3,5

For larger sizes refer to page 17.

Adaptor Coupling

MAC ADAPTOR COUPLING

+ Adaptor for different outside diameters
+ For above and below ground
+ Reliable and durable solution
+ Resistant to 0.6 bar

Adaptor Coupling MAC – for the connection of all pipe systems with different outside diameters
The Adaptor Coupling MAC joints all plain ended pipes with different outside diameters and materials.

The Adaptor Coupling MAC can be used for applications above and below ground as well as inside and outside of buildings.

When changing nominal diameters, the flow direction needs consideration.

CE 06 BS EN 295-4 | CE 06 BS EN 681 | UK CA | LRQA CERTIFIED ISO 9001

INSTALLATION

Position plain ended pipes.

Slide adaptor coupling over one plain end.

Push other plain ended pipe into adaptor coupling and tighten clamps.

DESCRIPTION

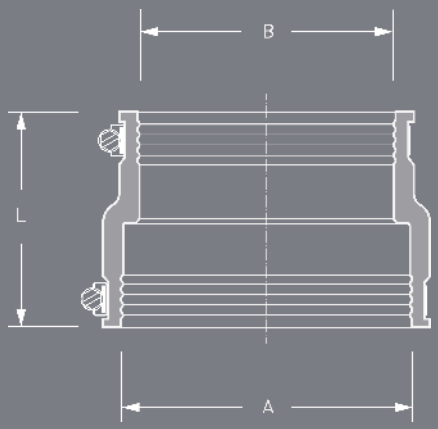

TECHNICAL SPECIFICATION

Adaptor Coupling MAC for the connection of all plain ended pipe systems with different outside diameters for applications above and below ground as well as inside and outside of buildings.

Pipe 1	DN/Material _____
Pipe 2	DN/Material _____
Article Number	_____
	____ Qty ____ Price/Unit ____ Total
Manufacturer:	MISSION RUBBER (UK) LTD., Sheffield, S35 9TG T +44 (0) 114 257 - 0040
Pressure Tightness:	0.6 bar water / -0.3 bar vacuum
Jetting Resistance:	120 bar
Sealing Material:	EPDM rubber with lock in place profile according to BS EN 681-1
Stainless Steel:	AISI 304/1.4301, alternatively AISI 316/1.4404 according to BS EN 10088-2
Temperature Resistance:	-40°C to +120°C, temporary max. temperature +160°C
Standard/Approval:	BS EN 295-4

PRODUCT RANGE

ADAPTOR COUPLING MAC

Article Number	Reference	A Size Range (mm)	B Size Range (mm)	L Length (mm)	resistant to (bar)	Nm	Weight (kg)
76000401	MAC 0401	32 - 40	24 - 32	65	0,6	6	0,1
76000501	MAC 0501	40 - 50	24 - 32	65	0,6	6	0,1
76000502	MAC 0502	40 - 50	32 - 40	65	0,6	6	0,1
76000632	MAC 0632	53 - 63	32 - 40	65	0,6	6	0,1
76000633	MAC 0633	53 - 63	40 - 50	90	0,6	6	0,2
76000893	MAC 0893	75 - 89	40 - 50	100	0,6	6	0,4
76000894	MAC 0894	75 - 89	53 - 63	100	0,6	6	0,3
76000853	MAC 1153	100 - 115	40 - 50	100	0,6	6	0,5
76001154	MAC 1154	100 - 115	53 - 63	100	0,6	6	0,3
76001155	MAC 1155	100 - 115	75 - 89	100	0,6	6	0,5
76001251	MAC 1251	110 - 125	80 - 95	120	0,6	6	0,6
76001252	MAC 1252	110 - 125	100 - 115	120	0,6	6	0,6
76001360	MAC 1360	121 - 136	75 - 89	100	0,6	6	0,6
76001361	MAC 1361	121 - 136	80 - 95	120	0,6	6	0,7
76001362	MAC 1362	121 - 136	100 - 115	120	0,6	6	0,6
76001363	MAC 1363	121 - 136	110 - 125	120	0,6	6	0,6
76001451	MAC 1451	130 - 145	95 - 110	100	0,6	6	0,5
76001452	MAC 1452	130 - 145	110 - 125	120	0,6	6	0,7
76001501	MAC 1501	135 - 150	100 - 115	100	0,6	6	0,5
76001602	MAC 1602	144 - 160	110 - 125	120	0,6	6	0,8
76001603	MAC 1603	144 - 160	121 - 136	120	0,6	6	0,8
76004000	MAC 4000	121 - 137	108 - 122	120	0,6	6	0,6
76001701	MAC 1701	155 - 170	100 - 115	150	0,6	6	1,0
76001702	MAC 1702	155 - 170	110 - 125	120	0,6	6	0,8
76001703	MAC 1703	155 - 170	130 - 145	120	0,6	6	0,8
76001801	MAC 1801	160 - 180	100 - 115	150	0,6	6	1,0
76001802	MAC 1802	160 - 180	110 - 125	150	0,6	6	1,1
76001805	MAC 1805	160 - 180	155 - 170	150	0,6	6	1,3
76001922	MAC 1922	170 - 192	110 - 125	120	0,6	6	0,9
76001923	MAC 1923	170 - 192	121 - 136	120	0,6	6	0,9
76001924	MAC 1924	170 - 192	144 - 160	120	0,6	6	0,9
76001991	MAC 1991	180 - 200	100 - 115	150	0,6	6	1,2
76001993	MAC 1993	180 - 200	121 - 136	150	0,6	6	1,2
76002000	MAC 2000	180 - 200	130 - 145	150	0,6	6	1,4
76002001	MAC 2001	180 - 200	155 - 170	150	0,6	6	1,3
76002002	MAC 2002	180 - 200	160 - 180	150	0,6	6	1,3
76002102	MAC 2102	185 - 210	110 - 125	150	0,6	6	1,3
76002104	MAC 2104	185 - 210	130 - 145	150	0,6	6	1,3
76002105	MAC 2105	185 - 210	144 - 160	150	0,6	6	1,2
76002152	MAC 2152 offset	200 - 215	100 - 115	150	0,6	6	1,0
76002203	MAC 2203	195 - 220	155 - 170	150	0,6	6	1,2
76002303	MAC 2303	205 - 230	130 - 145	165	0,6	6	1,8
76002352	MAC 2352	210 - 235	110 - 125	150	0,6	6	1,5
76002353	MAC 2353	210 - 235	121 - 136	150	0,6	6	1,5
76002354	MAC 2354	210 - 235	144 - 160	150	0,6	6	1,5
76002355	MAC 2355	210 - 235	170 - 192	150	0,6	6	1,5
76002356	MAC 2356	210 - 235	190 - 215	150	0,6	6	1,5
76002505	MAC 2505	225 - 250	155 - 170	150	0,6	6	1,4
76002507	MAC 2507	225 - 250	195 - 220	150	0,6	6	1,5
76002508	MAC 2508	225 - 250	205 - 230	150	0,6	6	1,6
76002654	MAC 2654	240 - 265	144 - 160	150	0,6	6	1,8
76002655	MAC 2655	240 - 265	170 - 192	150	0,6	6	1,7

For larger sizes refer to page 29.

Drain Coupling

MDC DRAIN COUPLING

+ Coupling for same outside diameters
+ For above and below ground
+ Reliable and durable solution
+ Resistant to 0.6 bar

Drain Coupling MDC – for the connection of all pipe systems with same outside diameters
The Drain Coupling MDC connects all plain ended pipes with same outside diameters and materials.

The Drain Coupling MDC can be used for applications above and below ground as well as inside and outside of buildings.

CE 06 BS EN 295-4 | CE 06 BS EN 681 | UK CA | LRQA CERTIFIED ISO 9001

INSTALLATION

Position plain ended pipes.

Slide coupling over one plain end.

Center coupling over joint. Tighten clamps.

DESCRIPTION

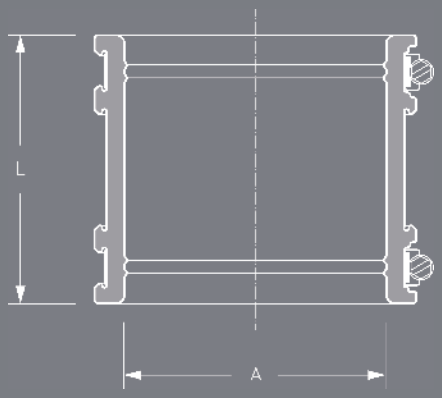

TECHNICAL SPECIFICATION

Drain Coupling MDC for the connection of all plain ended pipe systems with same outside diameters for applications above and below ground as well as inside and outside of buildings.

Pipe 1	DN/Material _____
Pipe 2	DN/Material _____
Article Number	_____
	____ Qty ____ Price/Unit ____ Total
Manufacturer:	MISSION RUBBER (UK) LTD., Sheffield, S35 9TG T +44 (0) 114 257 - 0040
Pressure Tightness:	0.6 bar water / -0.3 bar vacuum
Jetting Resistance:	120 bar
Sealing Material:	EPDM or Nitrile (NBR) rubber with lock in place profile according to BS EN 681-1
Stainless Steel:	AISI 304/1.4301, alternatively AISI 316/1.4404 according to BS EN 10088-2
Temperature Resistance:	-40°C to +120°C, temporary max. temperature +160°C
Standard/Approval:	BS EN 295-4

PRODUCT RANGE

DRAIN COUPLING MDC

Article Number	Reference	A Size Range (mm)	L Length (mm)	resistant to (bar)	Nm	Weight (kg)
76381190	MDC 32	24 - 32	65	0,6	6	0,1
76381195	MDC 40	32 - 40	65	0,6	6	0,1
76381200	MDC 50	42 - 50	65	0,6	6	0,1
76381205	MDC 56	50 - 56	70	0,6	6	0,1
76381947	MDC 65	55 - 65	90	0,6	6	0,2
76381952	MDC 75	65 - 75	90	0,6	6	0,3
76303021	MDC 89	75 - 89	100	0,6	6	0,4
76381970	MDC 95	85 - 95	100	0,6	6	0,4
76381955	MDC 100	85 - 100	100	0,6	6	0,4
76481958	MDC 115	100 - 115	120	0,6	6	0,4
76481125	MDC 125	110 - 125	110	0,6	6	0,4
76481960	MDC 137	120 - 137	120	0,6	6	0,4
76481961	MDC 150	125 - 150	120	0,6	6	0,5
76481962	MDC 162	137 - 162	120	0,6	6	0,5
76125165	MDC 165	150 - 165	110	0,6	6	0,5
76481964	MDC 175	150 - 175	120	0,6	6	0,6
76481970	MDC 185	165 - 185	120	0,6	6	0,6
76481966	MDC 190	165 - 190	150	0,6	6	0,6
76481978	MDC 200	175 - 200	150	0,6	6	0,6
76481980	MDC 212	187 - 212	150	0,6	6	0,6
76481982	MDC 225	200 - 225	150	0,6	6	0,7
76481983	MDC 250	225 - 250	150	0,6	6	0,7
76481984	MDC 275	250 - 275	150	0,6	6	0,8
76481290	MDC 290	265 - 290	150	0,6	6	0,9
76481320	MDC 320	290 - 320	150	0,6	6	0,9

OEM Projects

OEM

+ Custom rubber profile
+ Chemical and recyclable rubber available
+ Technical expertise
+ OEM steel bands available

Mission Rubber, with the support of Mücher, have the tools and machinary available to create custome rubber products when the demand is required. With the testing facilities we have we can ensure they meet the Bristish Standard guides rquired and UKCA Marking.

TECHNICAL SPECIFICATION

Pipe 1	DN/Material _____
Pipe 2	DN/Material _____
Article Number	_____
	____ Qty ____ Price/Unit ____ Total
Manufacturer:	MISSION RUBBER (UK) LTD., Sheffield, S35 9TG T +44 (0) 114 257 - 0040
Pressure Tightness:	TBC with testing or to meet application
Jetting Resistance:	TBC with testing or to meet application
Sealing Material:	EPDM or Nitrile (NBR) rubber with lock in place profile according to BS EN 681-1, chemical resistance, recyclable
Stainless Steel:	306 and 316
Temperature Resistance:	TBC with testing or to meet application
Standard/Approval:	Standards will meet the application requirement

OEM COUPLINGS

With 70 years of expertise with Flexible Rubber Couplings, Mission Rubber can create a set of couplings under OEM for your requirements. The couplings can be OEM / White Labeled to your requirment. The coupling will come complete with BE EN Standards 16397, 681-1 and 295:4 to ensure your products meet ther rquirements. The products will also be UKCA marked.

OEM RUBBER PROFILE / SEALS

Mission Rubber UK have the tools and machinary required to create custom rubber profile suitable to your requirement. We can create tools in house for extruded rubber and valcanise the join required. With a number of materials avaiable to us we can meet your requirement based on standard EPDM rubber, chemical resistance and recycled materials. All meeting the BS EN 681-1 and UKCA markings.

OEM STEEL BANDS

Mission Rubber and Muecher use state of the art machines to create steel bands for a number of couplings on a daily basis. We have used the machines to create custom OEM bands to a requirement for the customer needs. Using 304 and 316 grade steel, we have the ability to create the bands, with bolting system, to meet the standards set out.

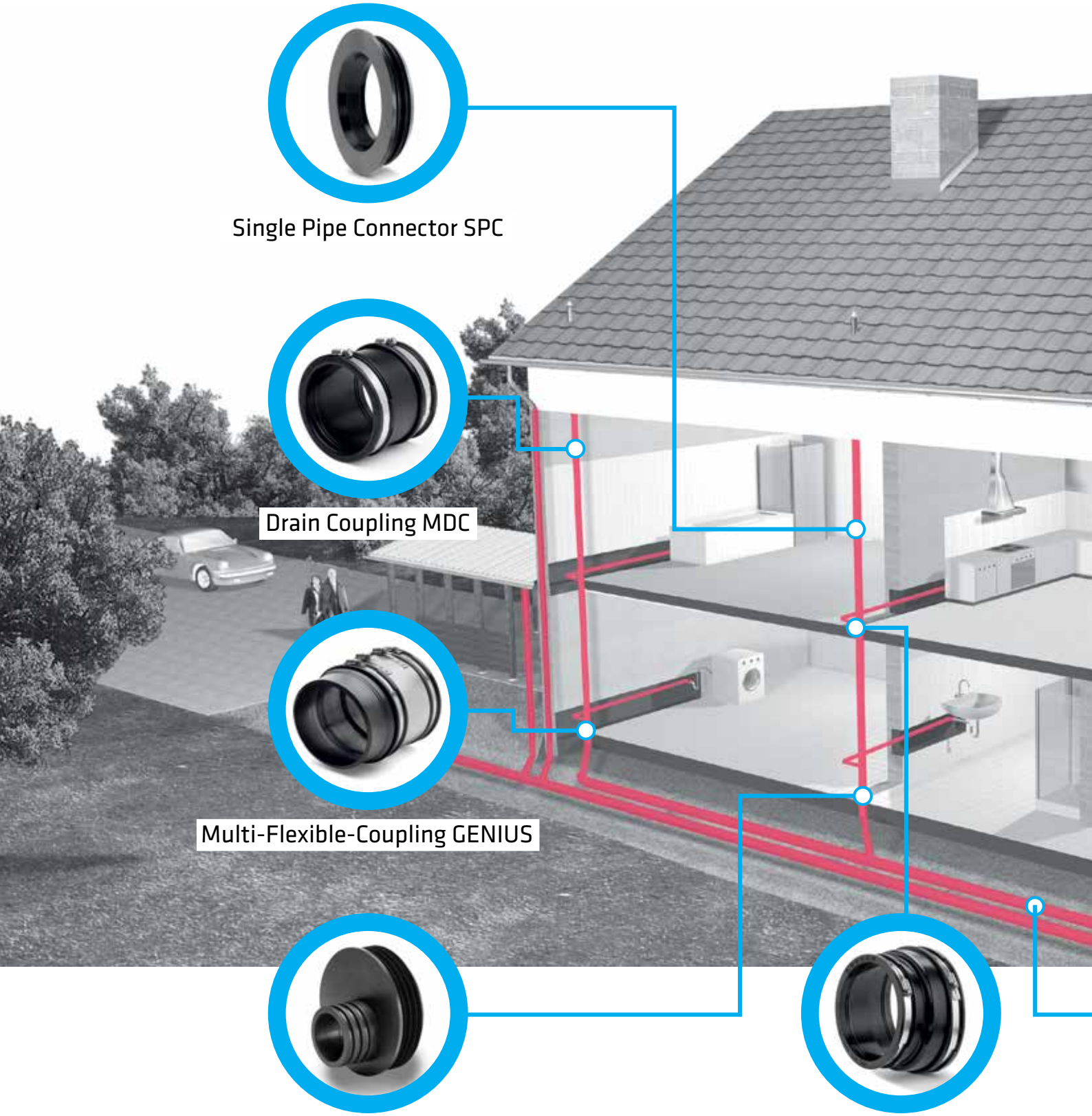
Single Pipe Connector SPC
Drain Coupling MDC
Multi-Flexible-Coupling GENIUS
Internal Drain Connector MRS
Adaptor Coupling MAC

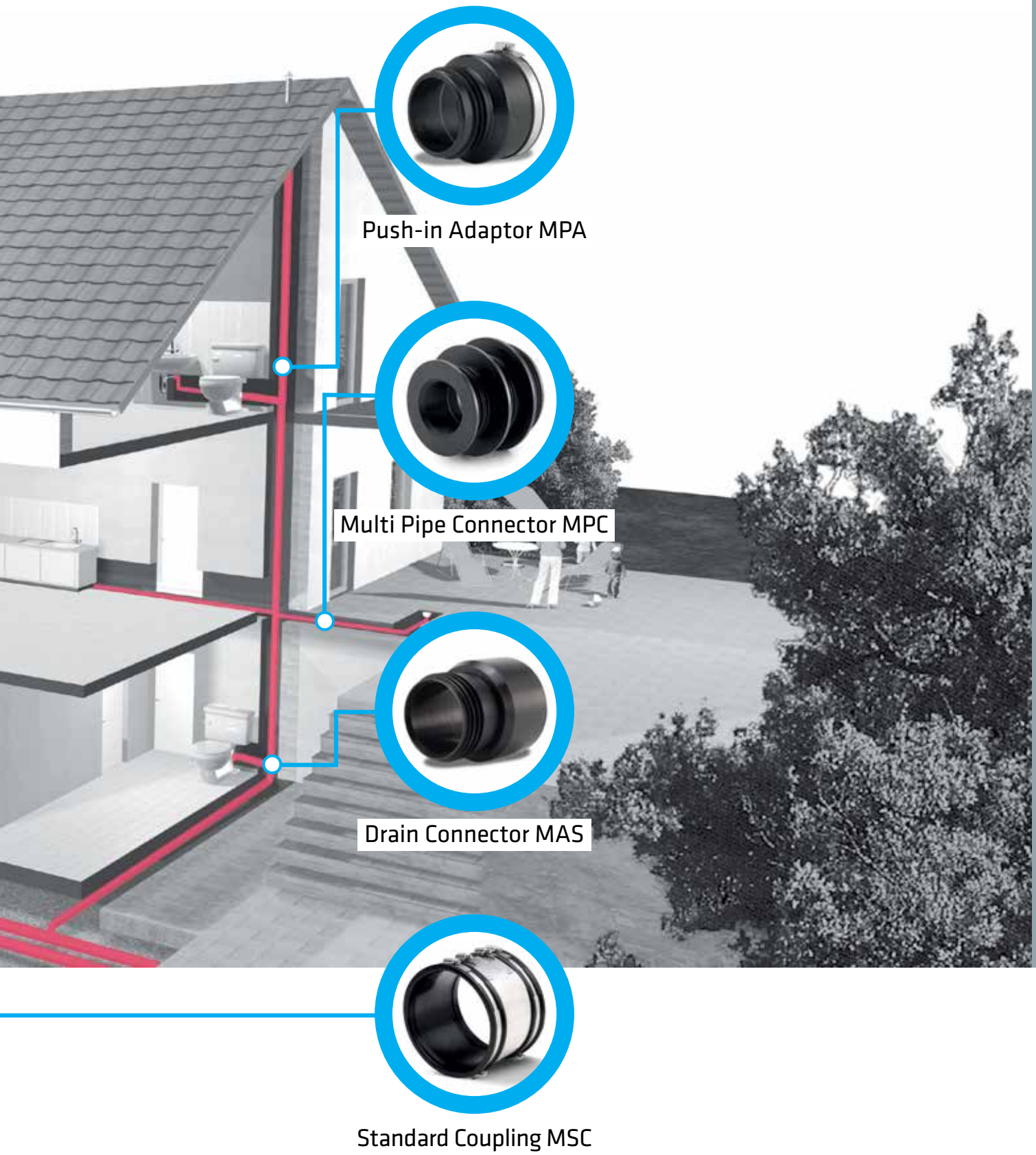
Push-in Adaptor MPA
Multi Pipe Connector MPC
Drain Connector MAS
Standard Coupling MSC

Internal Drain Connector

MRS

+ For different nominal sizes
+ Internal seal
+ Resistant to 0.5 bar
+ Easy & Quick installation

Internal Drain Connector – for the internal connection of pipes with different dimensions.
The internal drain connector is suitable for flush mounting as well as for exposed pipe connections. The MRS is made of a high-quality EPDM sealing material, which is characterized by durability and has a noise-reducing effect in downpipes.

CE 22 BS EN 681

LRQA CERTIFIED ISO 9001

INSTALLATION

Position pipe ends.

Fold in or cut off internal drain connector at the desired position, depending on the connection situation.

Insert internal drain connector into larger pipe, apply lubricant and push in smaller pipe.

PLUMBING

DESCRIPTION

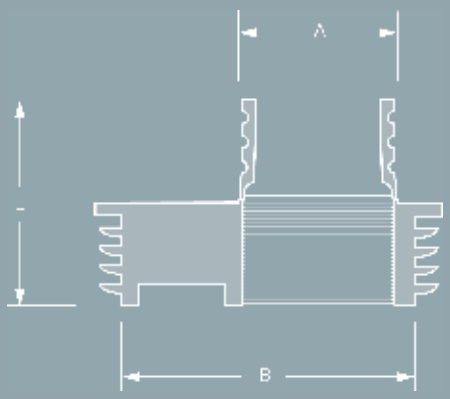

TECHNICAL SPECIFICATION

Internal Drain Connector – for the internal connection of pipes with different dimensions.

Pipe 1	DN/Material _____
Pipe 2	DN/Material _____
Article Number	_____
	___ Qty ___ Price/Unit ___ Total
Manufacturer:	MISSION RUBBER (UK) LTD., Sheffield, S35 9TG T +44 (0) 114 257 - 0040
Pressure Tightness:	0.5 bar water / -0.3 vacuum
Sealing Material:	EPDM rubber according to BS EN 681-1
Temperature Resistance:	-40°C to +120°C, temporary max. temperature +160°C
UV-/Ozone Resistance:	Resistant to UV radiation and ozone
Standard/Approval:	BS EN 681-1

PRODUCT RANGE

INTERNAL DRAIN CONNECTOR MRS						
Article Number	Reference	A Size Range (mm)	B Size Range (mm)	L Length (mm)	resistant to (bar)	Weight (kg)
500130	MRS 110 | 50/40	50/40	98 - 105	33 (66)	0,5	0,2
500131	MRS 110 | 90/75	90/75	98 - 105	33 (66)	0,5	0,1
500142	MRS 75/50	50	68 - 73	33	0,5	0,1
500143	MRS 125/110	110	117 - 119	34	0,5	0,1
500144	MRS 160/110	110	148 - 153	34	0,5	0,3

Drain Connector

MAS

+ For connection of SMU to plastic pipes
+ Internal seal
+ Resistant to 0.5 bar
+ Easy & quick installation

Drain connector MAS – for internal connection of SML pipes to plastic pipes
The connector is made of a high-quality EPDM sealing material, which is characterised by durability and has a noise-reducing effect in downpipes.

It is suitable for flush mounting as well as for use with exposed pipe connections.

CE 21 BS EN 681

LRQA CERTIFIED ISO 9001

INSTALLATION

Position pipe ends.

Press the drain connector into the plastic socket as far as it will go. Lip seal in plastic socket does not need to be removed.

Push the SMU-pipe into the drain connector.

DESCRIPTION

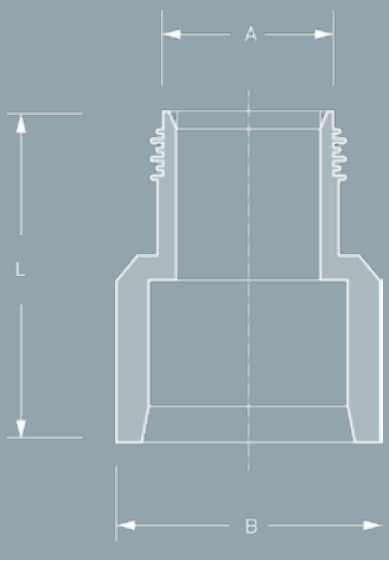

TECHNICAL SPECIFICATION

Drain connector MAS – for internal connection of SML pipes to plastic pipes.

Pipe 1	DN/Material	_____
Pipe 2	DN/Material	_____
Article Number	_____	
	____ Qty ____ Price/Unit ____ Total	
Manufacturer:	MISSION RUBBER (UK) LTD., Sheffield, S35 9TG T +44 (0) 114 257 - 0040	
Pressure Tightness:	-0.5 bar water / -0.3 bar vacuum	
Sealing Material:	EPDM according to BS EN 681-1	
Temperature Resistance:	-40°C to +120°C, temporary max. temperature +160°C	
UV-/Ozone Resistance:	Resistant to UV radiation and ozone	
Standard/Approval:	BS EN 681-1	

PRODUCT RANGE

DRAIN CONNECTOR MAS

Article Number	Reference	A Size Range (mm)	B Size Range (mm)	L Length (mm)	resistant to (bar)	Weight (kg)
500127	Drain Connector MAS, DN 50	50	58	93	0,5	0,15
500128	Drain Connector MAS, DN 70	75	78	105	0,5	0,25
500129	Drain Connector MAS, DN 100	110	110	117	0,5	0,40

PUSH-IN ADAPTOR MPA

+ For different materials
+ Internal seal
+ Resistant to 0.5 bar

Push-In Adaptor – for the internal connection of pipe systems with different dimensions and materials
The single Pipe Connector joints pipe systems with different dimensions and materials and can be used for flush-mounting and non-buried pipe connections.

The Push-In Adaptor is made from a durable EPDM rubber and has a noise reducing impact on downpipes.

CE 18 BS EN 681

LRQA CERTIFIED ISO 9001

INSTALLATION

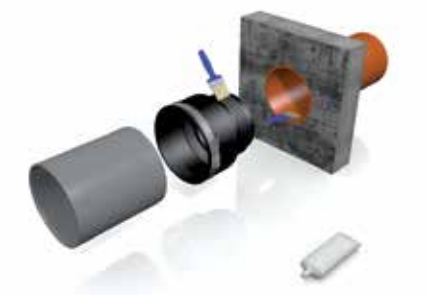

Apply lubricant to the plug end of the Push-In Adaptor and the inner wall of the pipe.

Push the Push-In Adaptor into the pipe as far as it will go.

Insert the plain end into the Push-In Adaptor and tighten clamps.

DESCRIPTION

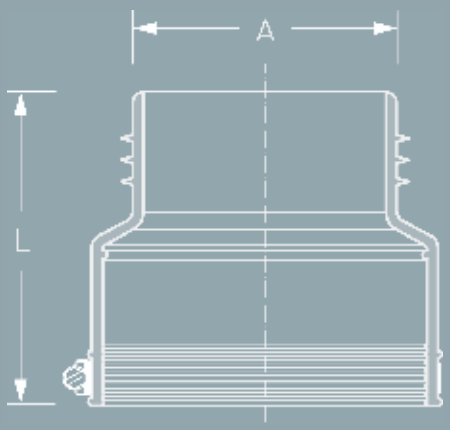

TECHNICAL SPECIFICATION

Push-In Adaptor for the internal connection of pipe systems with different dimensions and materials.

Manufacturer:	MISSION RUBBER (UK) LTD., Sheffield, S35 9TG T +44 (0) 114 257 - 0040
Pressure Tightness:	0.5 bar water / -0.3 bar vacuum
Sealing Material:	EPDM rubber according to BS EN 681-1
Temperature Resistance:	-40°C to +120°C, +160°C
Standard/Approval:	BS EN 681-1

PRODUCT RANGE

PUSH-IN ADAPTOR MPA

Article Number	Reference	A Size Range (mm)	B Size Range (mm)	L Length (mm)	resistant to (bar)	Nm	Weight (kg)
500117	Push-In Adaptor MPA 75	69 - 75	73 - 85	100	0,5	6	0,20
500116	Push-In Adaptor MPA 100	100 - 105	100 - 116	116	0,5	6	0,30
500118	Push-In Adaptor MPA 125	117 - 125	120 - 141	125	0,5	6	0,50
500138	Push-In Adaptor MPA 150	145 - 157	150 - 168	165	0,5	6	0,80

SINGLE PIPE CONNECTOR SPC

+ For different dimensions and materials
+ Internal seal
+ For horizontal and vertical installations
+ Resistant to 0.5 bar

Single Pipe Connector – for the internal connection of pipe systems with different dimensions and materials
The Single Pipe Connector joints pipe systems with different dimensions and materials and can be used for flush-mounting and non-buried pipe connections.

The Single Pipe Connector is made from a durable EPDM rubber and has a noise reducing impact on downpipes.

CE 18 BS EN 681

LRQA CERTIFIED ISO 9001

INSTALLATION

Position pipe ends.

Insert Single Pipe Connector into larger pipe. Apply lubricant to plain ended pipe.

Insert smaller pipe into Single Pipe Connector.

PLUMBING

DESCRIPTION

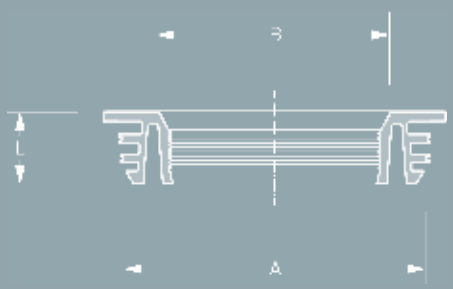

TECHNICAL SPECIFICATION

Single Pipe Connector for the internal connection of pipe systems with different dimensions and materials.

Pipe 1	DN/Material	_____
	Outside Ø (mm)	_____
Pipe 2	DN/Material	_____
	Internal Ø (mm)	_____
Article Number	_____	
	____ Qty ____ Price/Unit ____ Total	

Manufacturer:	MISSION RUBBER (UK) LTD., Sheffield, S35 9TG T +44 (0) 114 257 - 0040
Pressure Tightness:	0.5 bar water / -0.3 bar vacuum
Sealing Material:	EPDM rubber according to BS EN 681-1
Temperature Resistance:	-40°C to +120°C, temporary max. temperature +160°C
Standard/Approval:	BS EN 681-1

PRODUCT RANGE

SINGLE PIPE CONNECTOR SPC						
Article Number	Reference	A Size Range (mm)	B Size Range (mm)	L Length (mm)	resistant to (bar)	Weight (kg)
500120	Single Pipe Connector SPC 45 | 32	45	32	23	0,5	0,02
500121	Single Pipe Connector SPC 45 | 40	45	40	23	0,5	0,01
500000	Single Pipe Connector SPC 73 | 50	73	50	23	0,5	0,10
500122	Single Pipe Connector SPC 123/130 | 102	123 / 130	102	102	0,5	0,30
500001	Single Pipe Connector SPC 150 | 110	150	110	36	0,5	0,20

The single pipe connector is an internal pipe connection designed as a push fit application. The larger number of the SPC will push in to ID of the desired pipe. The smaller number of the SPC is for the OD of the pipe you can push in to the SPC.

Example: The SPC 150/110 can be pushed in to any pipe with an ID of 150 (6“), a pipe with an OD of 110 can then be pushed in to the SPC to create a water tight seal.

MULTI PIPE CONNECTOR MPC

+ For different dimensions and materials
+ Internal seal
+ For horizontal and vertical installations
+ Resistant to 0.5 bar

Multi Pipe Connector – for the internal connection of pipe systems with different dimensions and materials
The Multi Pipe Connector joints pipe systems with different dimensions and materials and can be used for flush-mounting and non-buried pipe connections. Multi Pipe Connectors can be combined with other Multi Pipe Connectors.

The Multi Pipe Connector is made from a durable EPDM rubber and has a noise reducing impact on downpipes.

CE 18 BS EN 681

LRQA CERTIFIED ISO 9001

INSTALLATION

Position pipe ends and cut off Multi Pipe Connector depending on the application.

Fold in Multi Pipe Connector depending on the application.

Insert Multi Pipe Connector into larger pipe, apply lubricant to plain ended pipe and insert smaller pipe.

DESCRIPTION

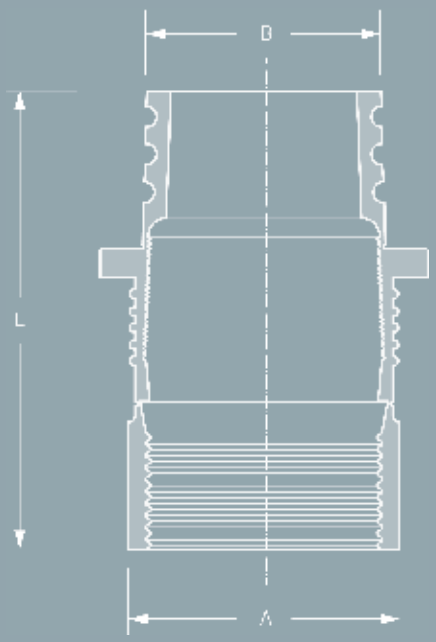

TECHNICAL SPECIFICATION

Multi Pipe Connector for the internal connection of pipe systems with different dimensions and materials.

Pipe 1	DN/Material	_____
	Outside Ø (mm)	_____
Pipe 2	DN/Material	_____
	Internal Ø (mm)	_____
Article Number	_____	
	___ Qty ___ Price/Unit ___ Total	

Manufacturer:	MISSION RUBBER (UK) LTD., Sheffield, S35 9TG T +44 (0) 114 257 - 0040
Pressure Tightness:	0.5 bar water / -0.3 bar vacuum
Sealing Material:	EPDM rubber according to BS EN 681-1
Temperature Resistance:	-40 C° to +120° C, temporary max. temperature +160° C
Standard/Approval:	BS EN 681-1

PRODUCT RANGE

MULTI PIPE CONNECTOR MPC						
Article Number	Reference	A Size Range (mm)	B Size Range (mm)	L Length (mm)	resistant to (bar)	Weight (kg)
500002	Multi Pipe Connector MPC 50 | 40/32	50/40	32	64	0,5	0,10
500003	Multi Pipe Connector MPC 64/58 | 50/40	64/58	50/40	96	0,5	0,10
500004	Multi Pipe Connector MPC 75/70 | 50/40	75/70	50/40	98	0,5	0,10
500005	Multi Pipe Connector MPC 96/83 | 75/50	96/83	75/50	100	0,5	0,20
500126	Multi Pipe Connector MPC 100/105 | 75/50	100-105	75/50	70	0,5	0,20
500006	Multi Pipe Connector MPC 100/105 | 90/75	100-105	90/75	70	0,5	0,20
500007	Multi Pipe Connector MPC 130/123 | 110/75	130-123	110/75	69	0,5	0,30
500008	Multi Pipe Connector MPC 150/125 | 110	150/125	110	120	0,5	0,40

The multi pipe connector is an internal pipe connection designed as a push fit application. The rubber can either be cut or folded in on itself to create the desired seal required. Each number on the MPC represent what sizes the MPC can accheive. Multiple MPC can be put together making it more adaptable.

Example: The MPC 50 | 40/32 - This can be pushed in to any pipe with an ID of 50mm. If the connecting pipe is 40mm the flap is cut away and the pipe is pushed in. If the connecting pipe is 32mm the flap is folded in and the pipe is pushed in.

The right solution is always to hand!

MULTI PIPE CONNECTOR KIT

Article-No. 500113

The Multi Pipe Connector Kit consists of 6 Multi Pipe Connectors which offer solutions when connecting pipe systems within 32 – 130 mm diameter.
The Multi Pipe Connector Kit is the ideal basic equipment for every workshop van. The right solution always to hand! The connection can be made immediately and the site work can continue without delay.

CE 18 DIN EN 681

LRQA CERTIFIED ISO 9001

PLUMBING

Adaptor Coupling

MAC ADAPTOR COUPLING

+ Adaptor for different outside diameters
+ For above and below ground
+ External compression seal
+ Resistant to 0.6 bar

Adaptor Coupling MAC – for the external connection of all pipe systems with different outside diameters
The Adaptor Coupling MAC connects all plain ended pipes with different outside diameters and materials.

The Adaptor Coupling MAC can be used for applications above and below ground as well as inside and outside of buildings.

When changing nominal diameters, the flow direction needs consideration.

INSTALLATION

Position plain ended pipes.

Slide adaptor coupling over one plain end.

Push other plain ended pipe into adaptor coupling and tighten clamps.

DESCRIPTION

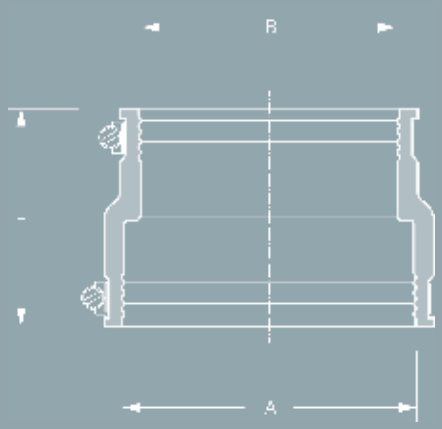

TECHNICAL SPECIFICATION

Adaptor Coupling MAC for the external connection of all plain ended pipe systems with different outside diameters for applications above and below ground as well as inside and outside of buildings.

Pipe 1	DN/Material _____
Pipe 2	DN/Material _____
Article Number	_____
	____ Qty ____ Price/Unit ____ Total
Manufacturer:	MISSION RUBBER (UK) LTD., Sheffield, S35 9TG T +44 (0) 114 257 - 0040
Pressure Tightness:	0.6 bar water / -0.3 bar vacuum
Jetting Resistance:	120 bar
Sealing Material:	EPDM rubber with lock in place profile according to BS EN 681-1
Stainless Steel:	AISI 304/1.4301, alternatively AISI 316/1.4404 according to BS EN 10088-2
Temperature Resistance:	-40°C to +120°C, temporary max. temperature +160°C
Standard/Approval:	BS EN 295-4

PRODUCT RANGE

ADAPTOR COUPLING MAC

Article Number	Reference	A Size Range (mm)	B Size Range (mm)	L Length (mm)	resistant to (bar)	Nm	Weight (kg)
500009	MAC 0401	32 - 40	24 - 32	65	0,6	3	0,10
500010	MAC 0501	40 - 50	24 - 32	65	0,6	3	0,10
500011	MAC 0502	40 - 50	32 - 40	65	0,6	3	0,10
500012	MAC 0632	53 - 63	32 - 40	65	0,6	3	0,10
500013	MAC 0633	53 - 63	40 - 50	90	0,6	3	0,20
500014	MAC 0893	75 - 89	40 - 50	100	0,6	3	0,40
500015	MAC 0894	75 - 89	53 - 63	100	0,6	3	0,25
500016	MAC 1153	100 - 115	40 - 50	100	0,6	3	0,45
500017	MAC 1154	100 - 115	53 - 63	100	0,6	3	0,30
500018	MAC 1155	100 - 115	75 - 89	100	0,6	3	0,45
500019	MAC 1251	110 - 125	80 - 95	120	0,6	6	0,60
500020	MAC 1252	110 - 125	100 - 115	120	0,6	6	0,60
500021	MAC 1360	121 - 136	75 - 89	100	0,6	6	0,55
500022	MAC 1361	121 - 136	80 - 95	120	0,6	6	0,65
500023	MAC 1362	121 - 136	100 - 115	120	0,6	6	0,60
500024	MAC 1363	121 - 136	110 - 125	120	0,6	6	0,60
500133	MAC 4000	121 - 137	108 - 122	120	0,6	6	0,60
500025	MAC 1451	130 - 145	95 - 110	100	0,6	6	0,50
500026	MAC 1452	130 - 145	110 - 125	120	0,6	6	0,65
500027	MAC 1501	135 - 150	100 - 115	100	0,6	6	0,45
500028	MAC 1602	144 - 160	110 - 125	120	0,6	6	0,75
500029	MAC 1603	144 - 160	121 - 136	120	0,6	6	0,75
500030	MAC 1701	155 - 170	100 - 115	150	0,6	6	0,95
500031	MAC 1702	155 - 170	110 - 125	120	0,6	6	0,75
500032	MAC 1703	155 - 170	130 - 145	120	0,6	6	0,75
500033	MAC 1801	160 - 180	100 - 115	150	0,6	6	1,00
500034	MAC 1802	160 - 180	110 - 125	150	0,6	6	1,10
500035	MAC 1805	160 - 180	155 - 170	150	0,6	6	1,25
500036	MAC 1922	170 - 192	110 - 125	120	0,6	6	0,85
500037	MAC 1923	170 - 192	121 - 136	120	0,6	6	0,85
500038	MAC 1924	170 - 192	144 - 160	120	0,6	6	0,85
500039	MAC 1991	180 - 200	100 - 115	150	0,6	6	1,15
500040	MAC 1993	180 - 200	121 - 136	150	0,6	6	1,20
500041	MAC 2000	180 - 200	130 - 145	150	0,6	6	1,35
500042	MAC 2001	180 - 200	155 - 170	150	0,6	6	1,30
500043	MAC 2002	180 - 200	160 - 180	150	0,6	6	1,30

For larger sizes refer to page 29.

Drain Coupling

MDC DRAIN COUPLING

+ Coupling for same outside diameters
+ For above and below ground
+ External compression seal
+ Resistant to 0.6 bar

Drain Coupling MDC – for the external connection of all pipe systems with same outside diameters
The Drain Coupling MDC connects all plain ended pipes with same outside diameters and materials.

The Drain Coupling MDC can be used for applications above and below ground as well as inside and outside of buildings.

CE 06 BS EN 295-4 | CE 06 BS EN 681 | UK CA | LRQA CERTIFIED ISO 9001

INSTALLATION

Position plain ended pipes.

Slide coupling over one plain end.

Center coupling over joint. Tighten clamps.

DESCRIPTION

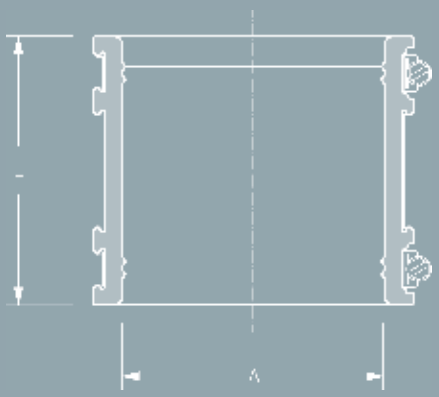

TECHNICAL SPECIFICATION

Drain Coupling MDC for the external connection of all plain ended pipe systems with same outside diameters for applications above and below ground as well as inside and outside of buildings.

Pipe 1	DN/Material _____
Pipe 2	DN/Material _____
Article Number	_____
	___ Qty ___ Price/Unit ___ Total
Manufacturer:	MISSION RUBBER (UK) LTD., Sheffield, S35 9TG T +44 (0) 114 257 - 0040
Pressure Tightness:	0.6 bar water / -0.3 bar vacuum
Jetting Resistance:	120 bar
Sealing Material:	EPDM or Nitrile (NBR) rubber with lock in place profile according to BS EN 681-1
Stainless Steel:	AISI 304/1.4301, alternatively AISI 316/1.4404 according to BS EN 10088-2
Temperature Resistance:	-40°C to +120°C, temporary max. temperature +160°C
Standard/Approval:	BS EN 295-4

PRODUCT RANGE

DRAIN COUPLING MDC

Article Number	Reference	A Size Range (mm)	L Length (mm)	resistant to (bar)	Nm	Weight (kg)
500044	MDC 32	24 - 32	65	0,6	3	0,10
500045	MDC 40	32 - 40	65	0,6	3	0,10
500046	MDC 50	42 - 50	65	0,6	3	0,10
500123	MDC 56	50 - 56	56	0,6	3	0,10
500047	MDC 65	55 - 65	90	0,6	3	0,20
500048	MDC 75	65 - 75	90	0,6	3	0,25
500049	MDC 89	75 - 89	100	0,6	3	0,35
500132	MDC 95	85 - 95	100	0,6	6	0,40
500050	MDC 100	85 - 100	100	0,6	6	0,40
500051	MDC 115	100 - 115	120	0,6	6	0,45
500052	MDC 120	105 - 120	120	0,6	6	0,35
500124	MDC 125	110 - 125	110	0,6	6	0,40
500053	MDC 137	120 - 137	120	0,6	6	0,40
500054	MDC 150	125 - 150	120	0,6	6	0,45
500055	MDC 162	137 - 162	120	0,6	6	0,50
500125	MDC 165	150 - 165	110	0,6	6	0,50
500056	MDC 175	150 - 175	120	0,6	6	0,55
500145	MDC 185	165 - 185	120	0,6	6	0,55
500057	MDC 190	165 - 190	150	0,6	6	0,55
500058	MDC 200	175 - 200	150	0,6	6	0,55

Coupling

MSC TYPE 2B

+ For all pipe materials
+ For above and below ground
+ For usage with bushes
+ Resistant to 2.5 bar

Coupling MSC Type 2B – for the external connection of all pipe systems with different or same outside diameters
The Coupling MSC Type 2B connects all plain ended pipes within same or different dimensions and is compensating differences in outside diameters of max. 12 mm. Larger differences will require the use of bushes.

The Coupling MSC Type 2B can be used for applications above and below ground as well as inside and outside of buildings.

CE 06 BS EN 295-4 | CE 06 BS EN 681 | UK CA | LRQA CERTIFIED ISO 9001

INSTALLATION

Position plain ended pipes.

Slide coupling over one plain end.

Center coupling over joint. Tighten clamps and shear band reciprocally.

DESCRIPTION

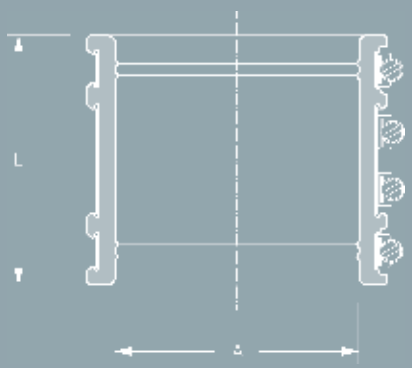

TECHNICAL SPECIFICATION

Coupling MSC Type 2B for the external connection of all plain ended pipe materials with different or same outside diameters for applications above and below ground as well as inside and outside of buildings. Differences in outside diameters of more than 12 mm will require the use of bushes.

Pipe 1	DN/Material _____
Pipe 2	DN/Material _____
Article Number	_____
	____ Qty ____ Price/Unit ____ Total
Manufacturer:	MISSION RUBBER (UK) LTD., Sheffield, S35 9TG T +44 (0) 114 257 - 0040
Pressure Tightness:	2.5 bar water / -0.3 bar vacuum
Jetting Resistance:	120 bar
Corrosion Resistance:	TOX®-Technology
Sealing Material:	EPDM or Nitrile (NBR) rubber with lock in place profile according to BS EN 681-1
Stainless Steel:	AISI 304/1.4301, alternatively AISI 316/1.4404 according to BS EN 10088-2
Temperature Resistance:	-40°C to +120°C, temporary max. temperature +160°C
Standard/Approval:	BS EN 295-4

PRODUCT RANGE

COUPLING MSC TYPE 2B FOR ALL PIPE MATERIALS						
Article Number	Reference	A Size Range (mm)	L Length (mm)	resistant to (bar)	Nm	Weight (kg)
500136	MSC 50	42-50	90	2,5	6	0,10
500059	MSC 65	55 - 65	90	2,5	6	0,25
500060	MSC 75	65 - 75	90	2,5	6	0,30
500061	MSC 89	75 - 89	100	2,5	6	0,40
500062	MSC 100	85 - 100	100	2,5	6	0,50
500063	MSC 115	100 - 115	120	2,5	6	0,80
500064	MSC 120	105 - 120	120	2,5	6	0,82
500135	MSC 125	110 - 120	120	2,5	6	0,90
500065	MSC 137	120 - 137	120	2,5	6	0,90
500066	MSC 150	125 - 150	120	2,5	6	1,00
500067	MSC 162	137 - 162	120	2,5	6	1,05
500068	MSC 175	150 - 175	120	2,5	6	1,15
500146	MSC 185	165 - 185	120	2,5	6	1,20
500069	MSC 190	165 - 190	150	2,5	6	1,60
500070	MSC 200	175 - 200	150	2,5	10	1,65

For larger sizes refer to page 17.

Multi-Flexible-Coupling

GENIUS

+ One coupling for all pipe materials
+ For above and below ground
+ With integrated bushes
+ Resistant to 2.5 bar

Multi-Flexible-Coupling GENIUS – for the connection of all pipe systems with different or same outside diameters
The Multi-Flexible-Coupling GENIUS with integrated bushes joints all plain ended pipes within one dimension and can be used inside and outside of buildings.

The right solution always to hand: What ever pipe material needs to be jointed within one dimension, the GENIUS will always be the right solution for the contractor.

CE 06 BS EN 295-4 | CE 06 BS EN 681 | UK CA | LRQA CERTIFIED ISO 9001

INSTALLATION

Bush at smaller pipe remains integrated – fold out and remove bush at larger pipe.

Slide GENIUS over larger pipe.

Push smaller pipe into GENIUS and tighten clamps and shear band reciprocally.

DESCRIPTION

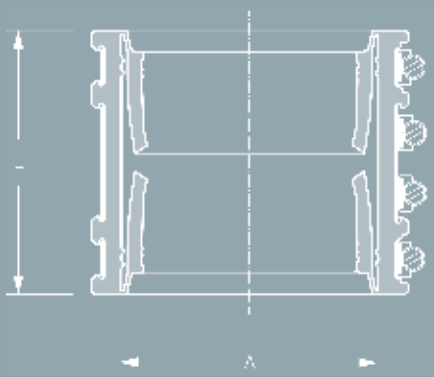

TECHNICAL SPECIFICATION

Multi-Flexible-Coupling GENIUS with integrated bushes for the connection of plain ended pipe materials within one dimension with different or same outside diameters.

Pipe 1	DN/Material _____
Pipe 2	DN/Material _____
Article Number	_____
	____ Qty ____ Price/Unit ____ Total
Manufacturer:	MISSION RUBBER (UK) LTD., Sheffield, S35 9TG T +44 (0) 114 257 - 0040
Pressure Tightness:	2.5 bar water / -0.3 bar vacuum
Jetting Resistance:	120 bar
Corrosion Resistance:	TOX®-Technology
Sealing Material:	EPDM or Nitrile (NBR) rubber with lock in place profile according to BS EN 681-1
Stainless Steel:	AISI 304/1.4301, alternatively AISI 316/1.4404 according to BS EN 10088-2
Temperature Resistance:	-40°C to +120°C, temporary max. temperature +160°C
Standard/Approval:	BS EN 295-4

PRODUCT RANGE

MULTI-FLEXIBLE-COUPLING GENIUS						
Article Number	Reference	A Size Range (mm)	L Length (mm)	resistant to (bar)	Nm	Weight (kg)
500071	GENIUS DN 100	108 - 137	120	2,5	10,0	1,30
500072	GENIUS DN 125	123 - 162	120	2,5	10,0	1,50
500073	GENIUS DN 150	158 - 192	150	2,5	10,0	2,40

For larger sizes refer to page 15..

APPLICATION SCHEDULES

DN 100	GENIUS-OPTION Size Range (mm)	DN 125	GENIUS-OPTION Size Range (mm)	DN 150	GENIUS-OPTION Size Range (mm)
If the pipe OD is between 108mm and 125mm the inner bush needs to remain.		If the pipe OD is between 123mm and 150mm the inner bush needs to remain.		If the pipe OD is between 158mm and 176mm the inner bush needs to remain.	
	108-125 125-137		123-150 150-162		158-176 176-192
If the pipe OD is between 125mm and 137mm the inner bush needs removing.		If the pipe OD is between 150mm and 162mm the inner bush needs removing.		If the pipe OD is between 176mm and 192mm the inner bush needs removing.	

FLEXIBLE TEE MPT

+ 90° Tee Junction to existing drains
+ For horizontal and vertical installations
+ Reliable and durable solution
+ Resistant to 0.5 bar

Flexible Tee – for the connection to existing drains
The Flexible Tee connects new to existing drains and is suitable for flush-mounting and non-buried pipe connections.

The Flexible Tee is made from a durable EPDM rubber and has a noise reducing impact on downpipes.

CE 16 BS EN 681

LRQA CERTIFIED ISO 9001

INSTALLATION

Cut off and remove pipe section. Loosen pipe support.

Position Flexible Tee in between plain ended pipes.

Insert plain ended pipes, tighten clamps and fix pipe support.

DESCRIPTION

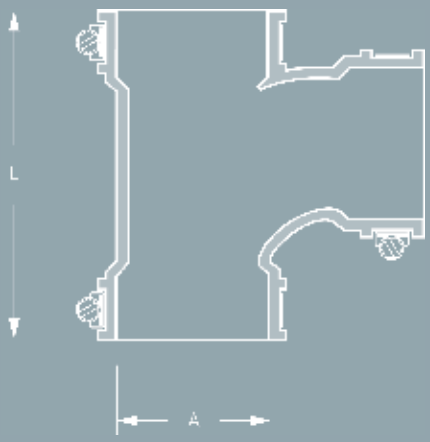

TECHNICAL SPECIFICATION

Flexible Tee for the 90°Connection to existing drains.

Pipe 1	DN/Material	_____
Pipe 2	DN/Material	_____
Pipe 2	DN/Material	_____
Article Number	_____	
	____ Qty ____ Price/Unit ____ Total	

Manufacturer:	MISSION RUBBER (UK) LTD., Sheffield, S35 9TG T +44 (0) 114 257 - 0040
Pressure Tightness:	0.6 bar water / -0.3 bar vacuum
Sealing Material:	EPDM rubber according to BS EN 681-1
Stainless Steel:	AISI 304/1.4301, alternatively AISI 316/1.4404 according to BS EN 10088-2
Temperature Resistance:	-40°C to +120°C, temporary max. temperature +160°C
Standard/Approval:	BS EN 681-1

PRODUCT RANGE

FLEXIBLE TEE MPT						
Article Number	Reference	A Size Range (mm)	L Length (mm)	resistant to (bar)	Nm	Weight (kg)
500074	Flexible Tee MPT 50	40 - 50	125	0,6	6	0,20
500075	Flexible Tee MPT 60	50 - 60	125	0,6	6	0,30
500076	Flexible Tee MPT 90	78 - 90	200	0,6	6	0,60
500077	Flexible Tee MPT 118	106 - 118	245	0,6	6	1,10

FLEXIBLE ELBOW MPE

+ 90° Elbow
+ For horizontal and vertical installations
+ Reliable and durable solution
+ Resistant to 0.5 bar

Flexible Elbow – for the repair of existing drains
The Flexible Elbow is used for the repair of existing drains and is suitable for flush-mounting and non-buried pipe connections.

The Flexible Elbow is made from a durable EPDM rubber and has a noise reducing impact on downpipes.

CE 16 BS EN 681

LRQA CERTIFIED ISO 9001

INSTALLATION

Cut off and remove pipe section. Loosen pipe support.

Position Flexible Elbow in between plain ended pipes.

Insert plain ended pipes, tighten clamps and fix pipe support.

DESCRIPTION

TECHNICAL SPECIFICATION

Flexible Elbow 90° for the repair of existing drains.

Pipe 1	DN/Material	_____
Pipe 2	DN/Material	_____
Article Number	_____	
	____ Qty ____ Price/Unit ____ Total	

Manufacturer:	MISSION RUBBER (UK) LTD., Sheffield, S35 9TG T +44 (0) 114 257 - 0040
Pressure Tightness:	0.6 bar water / -0.3 bar vacuum
Sealing Material:	EPDM rubber according to BS EN 681-1
Stainless Steel:	AISI 304/1.4301, alternatively AISI 316/1.4404 according to BS EN 10088-2
Temperature Resistance:	-40°C to +120°C, temporary max. temperature +160°C
Standard/Approval:	BS EN 681-1

PRODUCT RANGE

FLEXIBLE ELBOW MPE

Article Number	Reference	A Size Range (mm)	L Length (mm)	resistant to (bar)	Nm	Weight (kg)
500078	Flexible Elbow MPE 50	40 - 50	95	0,6	6	0,10
500079	Flexible Elbow MPE 60	50 - 60	140	0,6	6	0,20
500080	Flexible Elbow MPE 90	78 - 90	190	0,6	6	0,50
500081	Flexible Elbow MPE 118	106 - 118	210	0,6	6	0,80

END CAP MEC

+ Sealing of pipe ends
+ For use inside and outside of buildings
+ Clamps in stainless steel
+ Resistant to 0.6 bar

End Cap – for the long and short term sealing of pipe ends
The End Cap is used for the long and short term sealing of pipe ends to prevent ingress of dirt or water.

The End Cap can be used inside and outside of building.

CE 16 BS EN 681

LRQA CERTIFIED ISO 9001

INSTALLATION

Slide End Cap over pipe end.

Tighten clamps.

DESCRIPTION

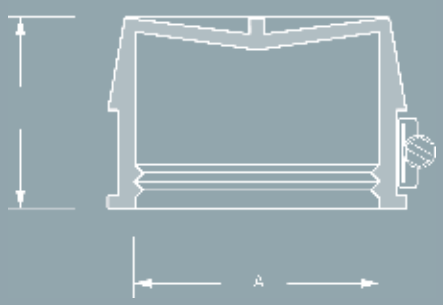

TECHNICAL SPECIFICATION

End Cap for the long and short term sealing of pipe ends.

Pipe	DN/Material _____
Article Number	_____
	____ Qty ____ Price/Unit ____ Total

Manufacturer:	MISSION RUBBER (UK) LTD., Sheffield, S35 9TG T +44 (0) 114 257 - 0040
Pressure Tightness:	0.6 bar water
Sealing Material:	EPDM rubber according to BS EN 681-1
Stainless Steel:	AISI 304/1.4301, alternatively AISI 316/1.4404 according to BS EN 10088-2
Temperature Resistance:	-40°C to +120°C, temporary max. temperature +160°C
Standard/Approval:	BS EN 681-1

PRODUCT RANGE

END CAP MEC						
Article Number	Reference	A Size Range (mm)	L Length (mm)	resistant to (bar)	Nm	Weight (kg)
500082	End Cap MEC 1	42 - 52	40	0,6	6	0,10
500083	End Cap MEC 2	56 - 66	40	0,6	6	0,10
500084	End Cap MEC 3	80 - 90	40	0,6	6	0,20
500085	End Cap MEC 4	105 - 115	40	0,6	6	0,20
500086	End Cap MEC 5	130 - 140	40	0,6	6	0,20
500087	End Cap MEC 6	155 - 165	40	0,6	6	0,30

RAINWATER ADAPTOR

+ Internal Pipe connection
+ Pusing in to 4" Pipe
+ Suitable for 68mm Round and Square PVC
+ Easy to install

The Mission Rubber Rainwater Adaptor will accept 65mm square and 68mm round downpipe.
External rainwater downpipes can be connected directly to a surface water drain or, depending on the design, via a gully trap to the underground drainage system.

CE 06 BS EN 681

LRQA CERTIFIED ISO 9001

PRODUCT RANGE

RAINWATER ADAPTOR			
Reference	Size A (mm)	Size B (mm)	resistant to (bar)
MWA 096	100	65-68	0,5

WASTE ADAPTOR

+ Internal Pipe connection
+ Push in pipes between 32 - 50mm
+ EPDM Rubber
+ Easy cut out ridges

The Mission Rubber Waste Adaptor will allow waste water pipes of 32mm, 40mm and 50mm to be connected directly into 110mm underground drainage pipe. Cut to the correct size and push in.

CE 06 BS EN 681

LRQA CERTIFIED ISO 9001

PRODUCT RANGE

WASTE ADAPTOR			
Reference	Size A (mm)	Size B (mm)	resistant to (bar)
MWA 095	100	32-40-50	0,5

LUBRICANT

+ Jointing forces are minimised
+ Compatibility with other sealing materials
+ For plastic, clay and concrete pipes
+ Various package sizes

Lubricant – minimizing the jointing forces for pipe laying
Lubricant is used to minimize the jointing forces when laying pipes such as plastic, clay or concrete.

Lubricant is compatible with other sealing materials.

PRODUCT RANGE

LUBRICANT				
Article Number	Reference	Pipe Material	Content Packaging	Weight (kg)
25060006	Lubricant White 75 ml	for plastic	75 ml Tube	0,1
25060004	Lubricant White 250 ml	for plastic	250 ml Tube	0,3
25060005	Lubricant White 500 ml	for plastic	500 ml Tube	0,5
25060011	Lubricant White 1 kg	for plastic	1 kg Can	1,1

VARIOUS PIPE MATERIALS

UP TO DN 600 (All dimensions in mm)

DN	100	125	150	175	180	200	225	250	300	350	375	400	450	500	525	600
Saltglaze / Vitrified	130		188	220		248	278		368		451	480	544	607		730
Hepseal	132		187				276		374			492	542	602		716
Hepsleeve							271		380							
Supersleeve	122		178				263		358							
Superseal	122		178				263		358							
Denseal			190				273		364		460	480	544	610		710
Densleeve	131		188				278		380							
PVC	110		160			200		250	315			400	450	500		
Ultra 3 PVC	110		160			200		250	315			400	450	500		
Polyethylene	111	126	161		181	201	226	251	317	357		402	453	503		
HDPE	110		160			200		250	315			400	450	500		
ABS	110		160			200		280	315							
Ultra Rib			170			200	250		335			400				
Ultra Fortis			170			200	250		335							
Osma			170			200	250		335							
Corrugated PVCU	110		170				250									
Rigidrain	118		178			234	267		355		435	457	523	569		674
Polysewer			160				250		330							
Rigisewer	132		187				276		374			457	511	568		672
Twinwall (polypipe)	119	150	180			235	260		360		435	455	490	590		690
Wavin Corrugated							266		354							
Wavin Twinwall			178				268		355		429		514	572		683
Naylor			178				267		353				520			693
Cherry	110		173				266		359		432		518			676
JFC			180				268		355		426		510			675
Cast Iron (Ensign/SML/SMU)	112	137	162			212		277	329			431		534		637
Ductile Iron BSENS	118		170			222	258	274	326	378	403	429	480	532		635
Cast Iron BS437 Drain	119		173				256									
Iron BS416 Soil	114	140	165			210										
Grey Iron BS4622	118		170			222		274	326			429	480	532		
Asbestos Cement (L)	125		182	208		232	260	288								
Asbestos Cement (M)									339		423	437	484	551		
Cement									346		429	440	490	559		
Pitch Fibre	125		181	238												
Stanton Bonna									410		485		578		669	678
CPM							295		410		490		575		670	770
Hughes									410		495		580		675	770
Hepworth									416		510				681	776
McCann							335		416		505		590		685	790
Aquaspira																656
SDS / Weholite 2KN																
SDS / Weholite 4kn																

OVER DN 600 (All dimensions in mm)											
DN	675	750	825	900	1050	1200	1350	1500	1800	2100	2400
Rigidrain		883		1040	1215						
Polysewer		880		1032							
Naylor		860									
Cherry		852		1027	1118	1290		1609			
JFC		848		1024	1200						
Stanton Bonna	825	910	975	1080	1260	1440	1680	1800	2160	2440	2840
CPM	820	980	1005	1080	1260	1440	1620	1810	2160		
Hughes		910		1080							
Hepworth		996		1080							
McCann	901			1080	1266	1460	1620	1800	2130	2460	2750
Aquaspira	731	806	881	976	1126	1296	1446	1596	1896	2196	
SDS / Weholite 2KN											
SDS / Weholite 4kn											

PLUMBING PIPES (All dimensions in mm)									
DN	32	40	50	65	75	80	100	125	150
Aluminium SCH40		48,3	60,3		88,9		114,3		
Cast Spun Iron BS1211 A.B.		55,9	69,1	82,3		95,5	121,9		
Cast Spun Iron BS1211 C.D.		55,9	69,1	82,3		95,5	121,9		
Cast Iron BS416 Soil			63		89		114		165
Cast Iron BS437 Drain					92		119		173
Cast Iron SMU/Ensign		48	58		83		110	135	160
Copper	35	42	54	66,7	76,1		108	133	159
Galvanised Steel			60,3			88,3	114,3		
Geberit Silent			65	75	90		110		160
Stainless Steel	32	40	50		75	82	110	126	161
ABS / PVC-C	36	43	56						
Galvanised Steel	32	40	50	65	75	90	110	125	160
Geberit Silent	36	43	56						
Stainless Steel	34	41	54						
ABS / PVC-C					75	90	110		160

MISSION RUBBER

OUR COMMITMENT

GUIDANCE

You can trust us – we guide you the right way!
Both commercial and technical consultation have got the highest priority for Mücher.

DELIVERY

3p.m. Cut Off - supplied next day!

INNOVATION

It is our companies aim to develop new products and to improve and further develop the existing range of products through rivaling new and innovative technologies.

AVAILABILITY

100% availability creates confidence! Our entire product range is stocked in bulk.

SECURITY

On the safe side with Mücher!
All our products comply with and exceed the requirements of the latest DIN and European standards as well as national and international approvals. If it says MISSION you can depend on a safe installation process for the installer.

MISSION RUBBER (UK) Limited
Atlas Business Park, Starnhill Close, Sheffield,
S35 9TG, United Kingdom
T +44 (0) 114 257 0040
F +44 (0) 114 257 1122
sales@missionrubber.co.uk

www.missionrubber.co.uk

CIVILS
INDUSTRIAL
PLUMBING

MISSION
PRODUCT-FINDER

© • • 2025 MISSION RUBBER (UK) Limited • • All rights reserved.